SUNCOAST

SOLIDSHADE ROOFS

Creating exceptional residential enclosures for any application

| TABLE OF CONTENTS

04 ABOUT US

06 PRODUCT: SOLIDSHADE ROOF

20 ACCESSORIES

22 MANUFACTURING

23 POWDER COATING

24 TEAM

| ABOUT US

Pushing the boundaries in luxury outdoor living

Suncoast is a premier manufacturer, supplier and builder of luxury outdoor enclosures. With over 30 years of experience building in demanding environments, Suncoast delivers reliable, high-quality outdoor enclosures built to last.

MANUFACTURING

Suncoast takes control of the manufacturing process to ensure the highest quality product tailored perfectly to your custom application. From cutting and coating to kitting and shipping, the Suncoast team ensures the reliable delivery of a structure built to last for many years.

PRODUCT DEVELOPMENT

We strive to be at the leading edge of the industry with respect to technology and style. That's why our product development team is continuously sourcing new profiles, parts and smart options to engineer functional and beautiful products.

SOLIDSHADE ROOF SYSTEM

Engineered simplicity, built for year-round outdoor living.

Enjoy a comfortable outdoor space without the need for adjustments—Suncoast's SolidShade fixed patio cover is designed to provide consistent protection and peace of mind, no buttons required. With its solid aluminum roof, you get reliable shade from intense sun and dependable shelter from rain, so your space is always ready to enjoy.

SolidShade moves beyond conventional panel systems that rely on visible rafters and bulky substructures, using precision-extruded aluminum boards designed to span cleanly without additional support. The result is a sleek tongue-and-groove ceiling with a refined, modern finish.

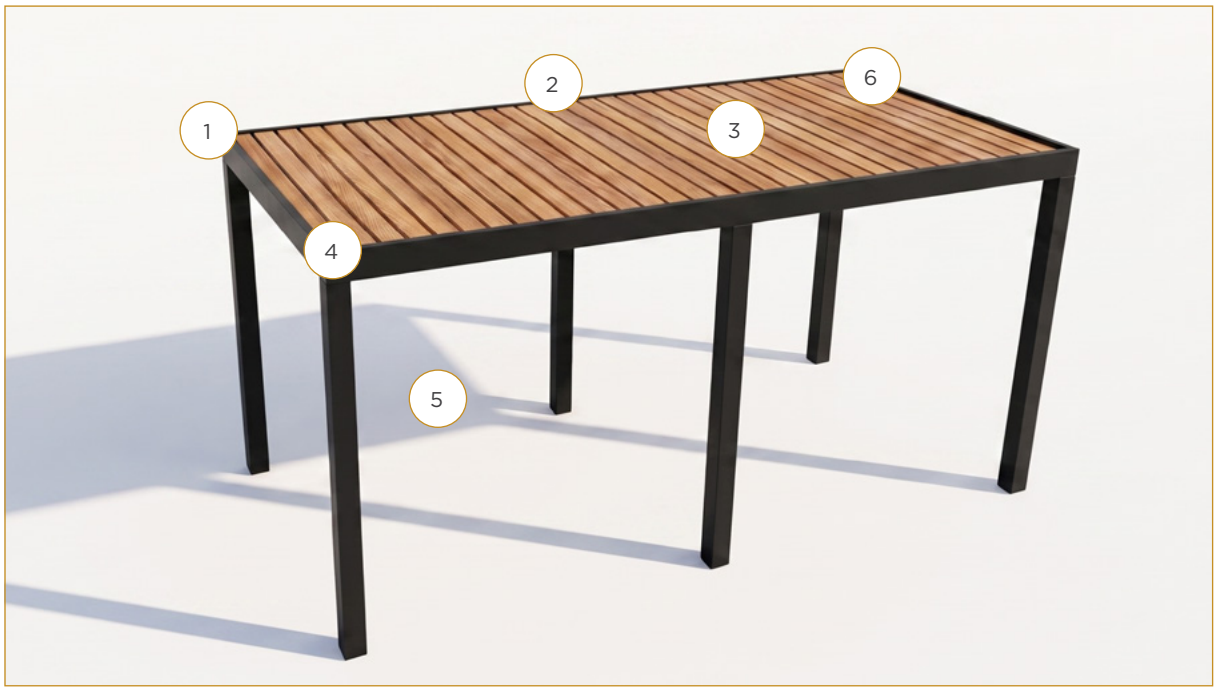

1.

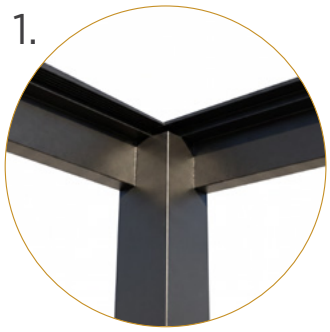

All-Aluminum Frame

- Structural-grade materials
- Engineered profiles

2.

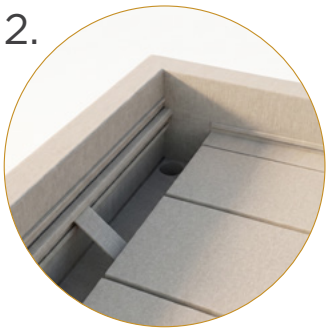

Versatile Drainage

- SolidShade Blades drain into internal gutter
- Unrestricted zone-to-zone water flow

3.

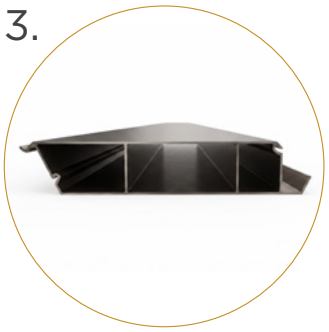

Twin-Wall Design

- Creates excellent convection currents between hot and cool spaces
- Reinforced strength and integrity

4.

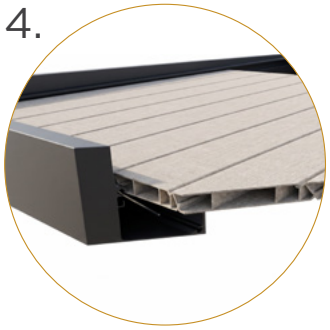

Low-Profile Architecture

- Low-profile design for a seamless, design-forward finish

5.

Maximum Shade

- 100% shade from sun, harsh UV, and precipitation

6.

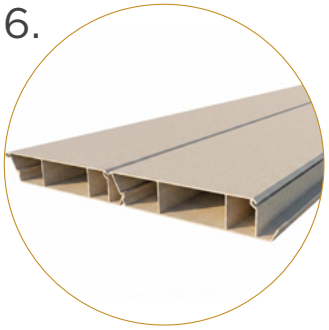

Interlocking Configuration

- SolidShade Blades are designed to interlock, creating a weather seal and reinforced strength

Frame Specifications

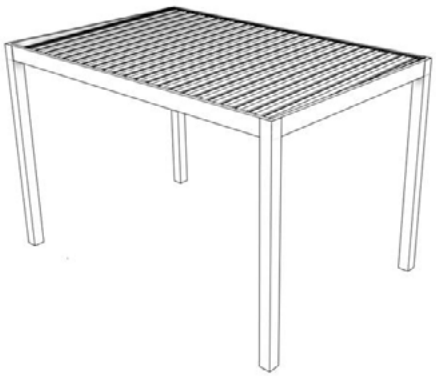

Concealed Style

- Posts: 6x6 or 8x8 aluminum posts
- Beams: 2x8, 4x8, 2x10 perimeter frame beam

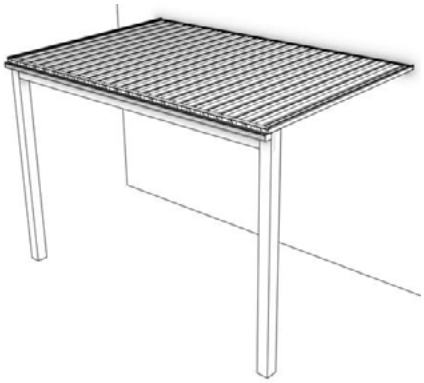

Eavestrough Style

- Posts: 4x4, 6x6, or 8x8 aluminum posts
- Beams: 2x8, 4x8, 2x10 head beam

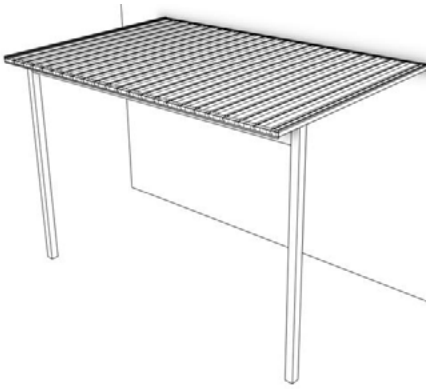

Cantilever Style

- Posts: 4x4, 6x6, or 8x8 aluminum posts
- Beams: 2x8, 4x8, 2x10 head beam

Integration options with Louvered Roof or Polycarbonate Roof systems.

Color Options

Suncoast offers 6 stylish standard powder coating color options as well as any custom color which can be found in the RAL palette. Special-order textures and prints such as wood-grain are also available.

Black

Linen

Custom

Grey

Tan

White

Mocha

Wood Grain Options

Available for SolidShade Blades only, not posts, frames, gutter, etc. Standard options for select wood grain sublimation powder coating colors are available. Special-order textures and prints are also available.

Chestnut

White Oak

We are pleased to offer our Industry-Leading Limited Lifetime Warranty. For more information please visit our website at suncoastenclosures.com/warranty

We know the best results come from bold ideas. Our SolidShade Roof System pushes the boundaries of innovation, durability and dependability.

INDUSTRIAL STRENGTH

Industrial-strength structural aluminum is used on our framing extrusions to ensure the most dependable and sturdy structures on the market. Our 6x6 posts and 2x8 or 4x8 beams are standard with other options available for higher-demand situations. Suncoast SolidShade Blades are 8 inches wide and can span an impressive 15 feet. Blades can be interlocked continuously to cover large footprints while maintaining structural integrity.

DRAINAGE

The unique design of the SolidShade Roof directs water down the blades through its integrated weather-tight profile. Regardless of the style of SolidShade Roof selected, drainage has been considered for each application. For the Concealed and Eavestrough styles, gutters are incorporated and can be mounted internally or externally, respectively. The Cantilever style, however, does not include a gutter, but rather drains off a drip edge.

SIMPLICITY

The Suncoast SolidShade aluminum roof is thoughtfully engineered around a minimalist design philosophy, using a refined, limited number of components to reduce complexity while enhancing durability and ease of installation. Every element is purpose-driven, eliminating unnecessary parts to create a clean, streamlined structure that performs reliably and looks exceptional. By simplifying the system, SolidShade maximizes both functional benefits and visual appeal—delivering a modern, elegant outdoor solution that is as efficient as it is beautiful.

CUSTOMIZATION

Suncoast SolidShade Roofs are designed to be accessorized! Because of the open architecture, accessories can be mounted directly to SolidShade Blades. Auxiliary beams and conduit spaces can be added for mounting and wiring of just about anything. Heaters, lights, fans and AV components are common additions made to enhance the space and further increase the amount of time you can fully utilize the area. The SolidShade Roof can also pair nicely with any Suncoast Wall Products including both permanent and retractable options.

| SOLIDSHADE ROOF SYSTEM

Some highlights of work we've done for forward-thinking clients.

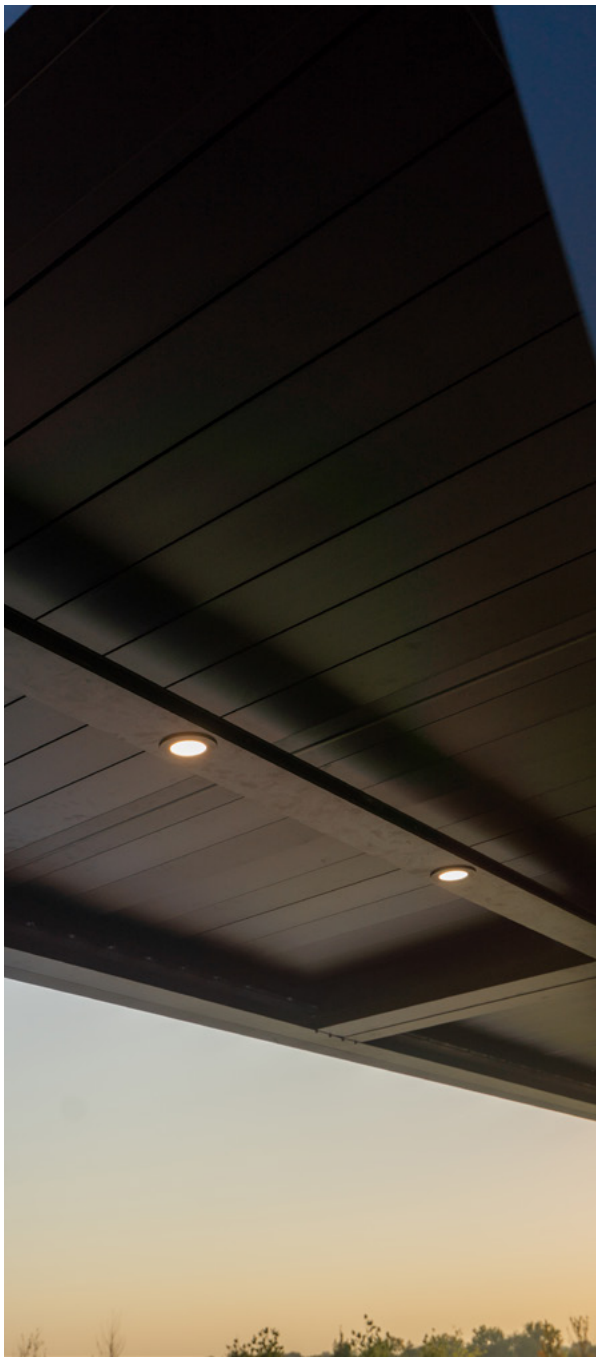

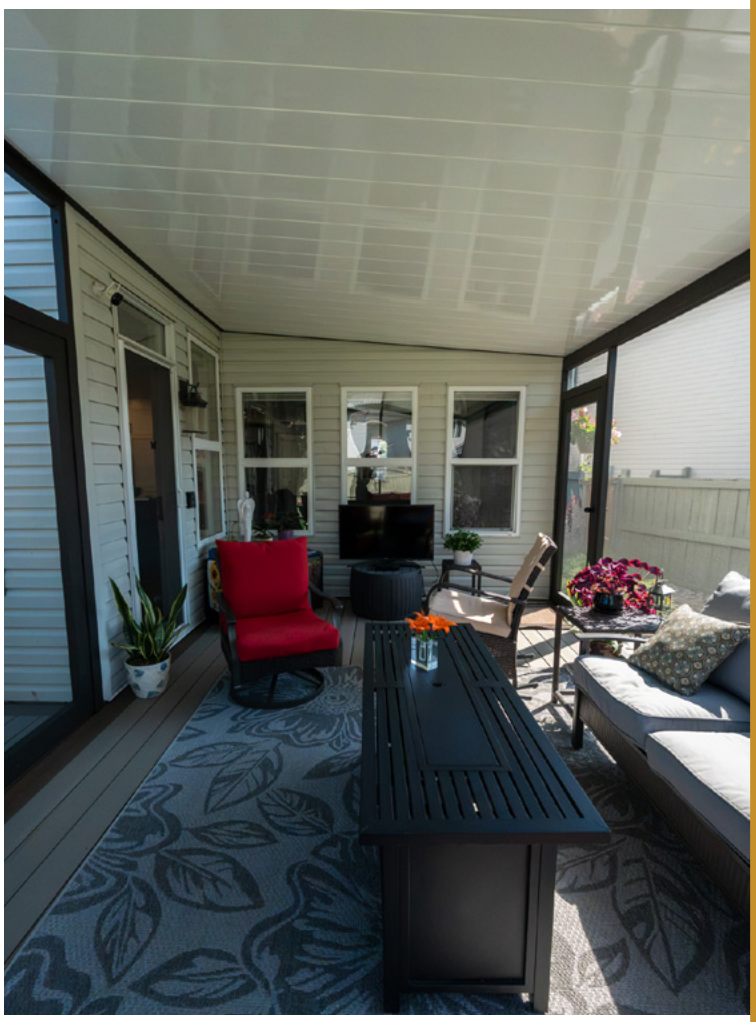

| ACCESSORIES

Complete your build with some of our integrated accessories

Heaters

With a variety of options from quality manufacturers such as Eurofase, Infratech and Bromic, you are able to choose the correct heater to suit your style and needs. Choose from power outputs ranging from 1,600 W to 4,000 W.

Heaters are available in 120 V, 208 V and 240 V options. Additional products are available for special order.

Lighting

Suncoast products are designed to meet various lighting needs with pot light, rope light and track lighting options available. Third-party lights can also be added.

Sensors

Rain and wind sensors can be built into the control system of the Louvered Roofs and Retractable Screens. Open and close functions are automated to perform even when you are not around to close everything up in high winds or rain.

Close the blades and lower the screens as soon as the first few drops land.

Fans

For warmer climates, our framing and accessory beams are designed to handle fan mounting. Suncoast options are available or customer-supplied fans can also be mounted.

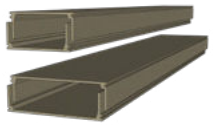

Accessory Beam

Accessory beams are installed where add-ons are desired but no mounting location is available. Wiring for accessories can be run inside the beam.

Smart Home Automation

Suncoast products are designed to be compatible with smart home and automation systems. Use the app to control your Retractable Screens and Louvered Roof from anywhere, or take advantage of voice activation through Google or Alexa.

| MANUFACTURING

Every Suncoast Retractable Screen and Louvered Roof System is fully custom-built to the exact dimensions of your space. Precise on-site measurements are taken and translated directly to our manufacturing facility, where each system is fabricated to ensure a flawless fit and seamless integration with your home or commercial structure.

For retractable screens, Suncoast accounts for floor slope and surface variations so the bottom bar makes consistent contact across the entire width. For louvered roofs, structural components, rotating louver blades, and integrated drainage systems are precision-engineered to ensure proper alignment, smooth operation, and long-term performance.

Our state-of-the-art CNC machinery, RF welding technology, and in-house fabrication processes allow Suncoast to deliver some of the most precise, durable, and high-quality outdoor living systems in the industry.

IN-HOUSE POWDER-COATING PROCESS

By bringing powder coating in-house with our state-of-the-art coating line, Suncoast now ensures superior finish quality and reliable color availability. Using premier powder coating materials and a highly regulated application procedure, we provide our customers with the best finish available in terms of consistency, durability, and resistance to the elements. Suncoast powder coating standards meet even the most demanding requirements with an AAMA 2604 rating.

| THE TEAM

The people who make everything happen.

Our manufacturing team is the best in the industry because of their commitment to quality, efficiency, and customer satisfaction. With years of experience and a passion for innovation, they consistently produce products that meet the highest standards of excellence. Their advanced technology and attention to detail ensure that every product is manufactured to exact specifications and delivered on time. Furthermore, they maintain a strong culture of continuous improvement, regularly evaluating and updating their processes to stay ahead of the competition. With our manufacturing team at the forefront of the industry, we are able to provide our customers with exceptional products and service.

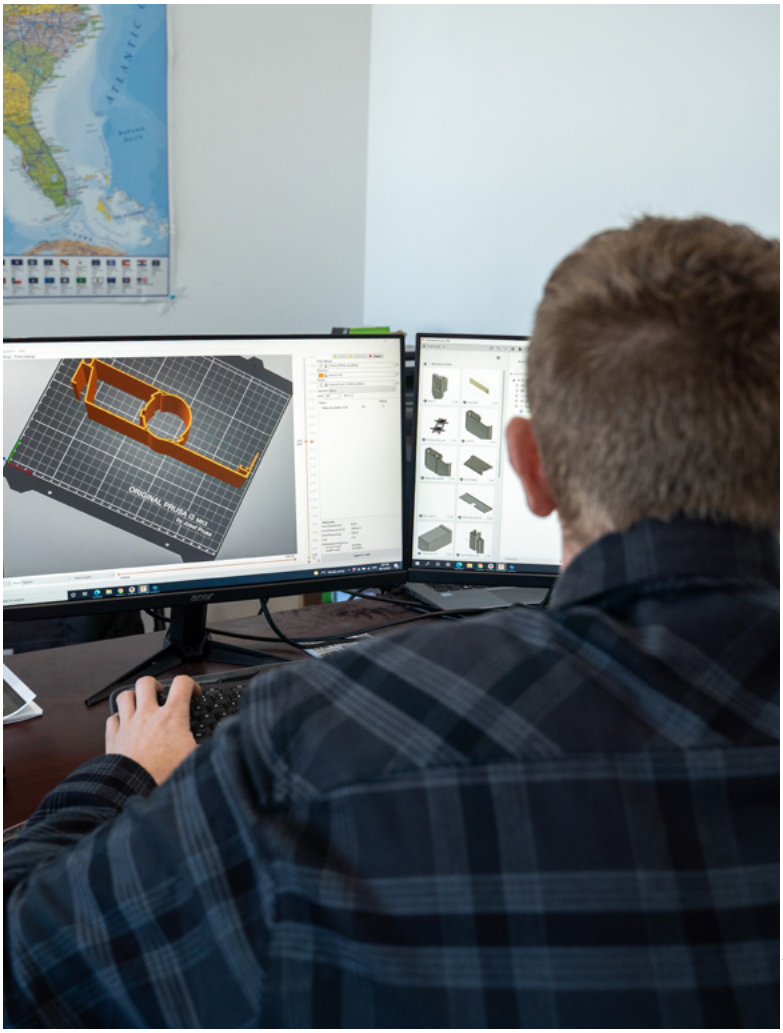

SUNCOAST

+1 877 449 5106 | suncoastenclosures.com