SUNCOAST

LOUVERED ROOFS

Creating exceptional residential enclosures for any application

| TABLE OF CONTENTS

04 ABOUT US

06 PRODUCT: LOUVERED ROOF

20 ACCESSORIES

22 MANUFACTURING

23 POWDER COATING

24 THE TEAM

| ABOUT US

Pushing the boundaries in luxury outdoor living

Suncoast is a premier manufacturer, supplier and builder of luxury outdoor enclosures. With over 30 years of experience building in demanding environments, Suncoast delivers reliable, high-quality outdoor enclosures built to last.

MANUFACTURING

Suncoast takes control of the manufacturing process to ensure the highest quality product tailored perfectly to your custom application. From cutting and coating to kitting and shipping, the Suncoast team ensures the reliable delivery of a structure built to last for many years.

PRODUCT DEVELOPMENT

We strive to be at the leading edge of the industry with respect to technology and style. That's why our product development team is continuously sourcing new profiles, parts and smart options to engineer functional and beautiful products.

LOUVERED ROOF SYSTEM

Enjoy the sunshine with the option of shade on demand

Completely customizable. Maintenance-free. All of our Louvered Roof Systems are designed and engineered to withstand strong winds, heavy snow loads and intense sun exposure.

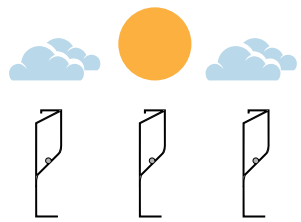

FULL SUNSHINE WHEN IT'S COOL

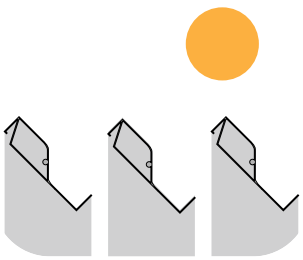

SHADE WHEN IT'S HOT

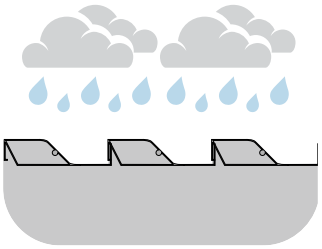

DRY WHEN IT'S RAINING

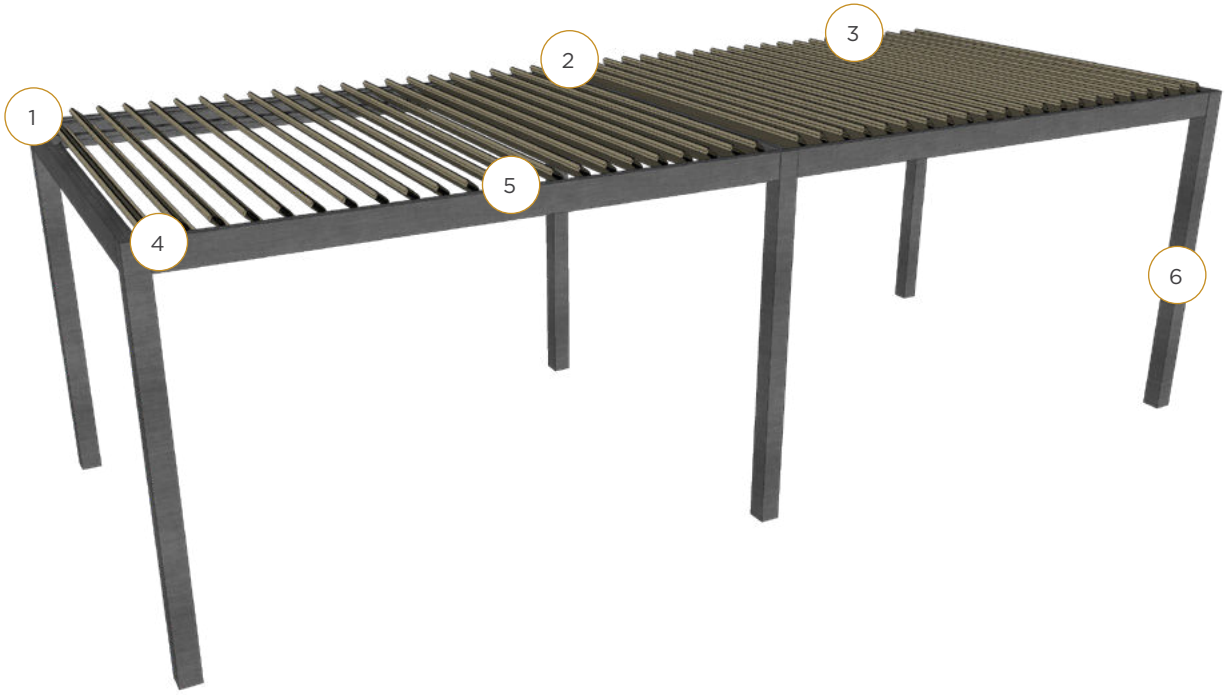

1.

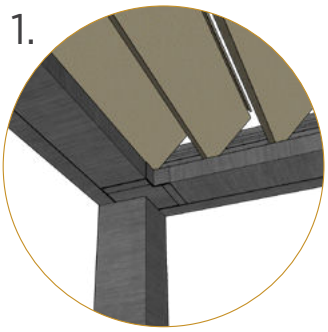

All-Aluminum Frame

- Structural-grade materials
- Engineered profiles

2.

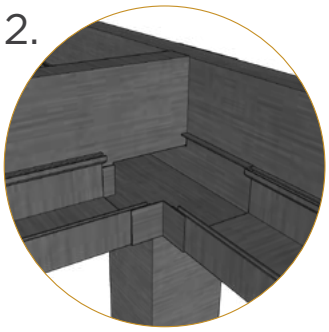

Multi-Zone Drainage

- Louver blades drain into internal gutter
- Unrestricted zone-to-zone water flow

3.

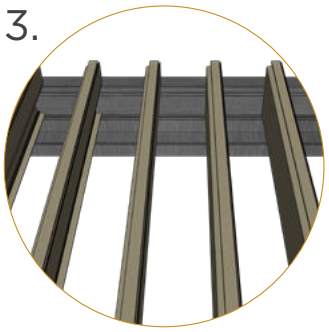

Maximum Sunlight

- 8” blade spacing provides industry-leading louver blade opening

4.

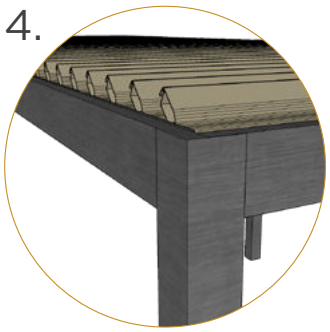

Robust Components

- Our 6x6 posts and 2x8 or 4x8 beams are standard
- Other options available for higher-demand situations

5.

Hidden Motor

- A dedicated blade in each zone houses the drive motor
- No external arms, levers or pistons

6.

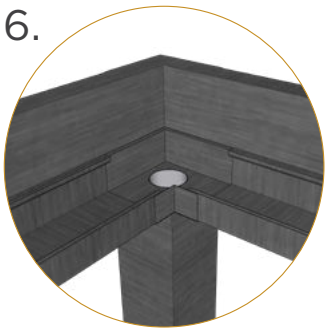

Integrated Gutter

- Integrated internal gutter system
- Gutter fixed internally to frame
- Downspout hidden inside post

Frame Specifications and Tolerances

The following measurments are subject to local environment load requirments.

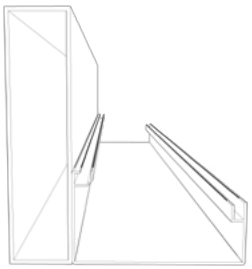

2 x 8 Frame with Internal Gutter

- Span up to 15’ between posts

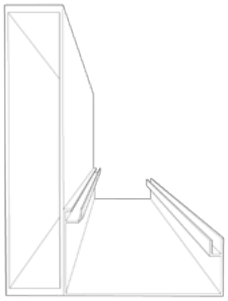

2 x 10 Frame with Internal Gutter

- Span up to 18’ between posts

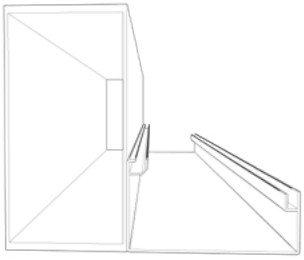

4 x 8 Frame with Internal Gutter

- Span up to 22’ between posts

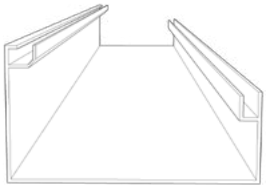

Gutter with Light Track and Wire Chase

- The integrated gutter is fastened to the beam and includes chases for motor wiring and optional built-in LED light strip

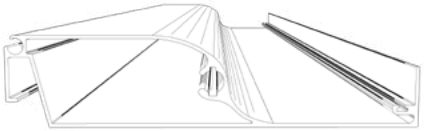

Louver Blade

- Depending on local snow load ratings, blades can span up to 14’
- Weather stripping on each blade ensures a tight seal and a quiet interface

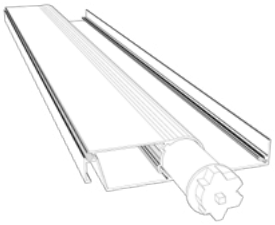

Louver Motor Blade

- A Motor Blade houses the high-torque, Italian-made Gaposa motor
- Motors and electrical components are CSA approved
- Control up to 150 sq. ft. with one motor

Color Options

Suncoast offers 6 stylish standard powder coating color options as well as any custom color which can be found in the RAL palette. Special-order textures and prints such as wood-grain are also available.

Black

Linen

Custom

Grey

Tan

White

Mocha

Wood Grain Options

Available for Louvered Roof Blades only, not posts, frames, gutter, etc. Standard options for select wood grain sublimation powder coating colors are available. Special-order textures and prints are also available.

Chestnut

White Oak

We are pleased to offer our Industry-Leading Limited Lifetime Warranty. For more information please visit our website at suncoastenclosures.com/warranty

We know the best results come from bold ideas. Our Louvered Roof System pushes the boundaries of innovation, durability and dependability.

INDUSTRIAL STRENGTH

Industrial-strength structural aluminum is used on our framing extrusions to ensure the most dependable and sturdy structures on the market. Our 6x6 posts and 2x8 or 4x8 beams are standard with other options available for higher-demand situations. Suncoast louver blades are the widest available at 8 inches and can span an impressive 15 feet per zone.

DRAINAGE

Each louver zone is surrounded by a gutter system fastened to the beam with a seamless look. When louver blades are in the closed position, water is directed to the perimeter of the zones where it flows to the desired drainage location. Downspouts can be hidden inside the structural post or routed externally.

FLEXIBILITY

Suncoast boasts one of the largest blade widths on the market, letting in more light when open than other systems. Keep the sun shining through by adjusting the blades through a range up to 140 degrees, controlled either from a remote or the app on a phone or tablet. With optional smart connectivity, key people will always be able to operate the Louvered Roof System.

CUSTOMIZATION

Suncoast Louvered Roofs are designed to be accessorized! Auxiliary beams and conduit spaces can be added for mounting and wiring of just about anything. Heaters, lights, fans and AV components are common additions made to enhance the space and further increase the amount of time you can fully utilize the area. Pair a Louvered Roof with Retractable Screens in mesh or vinyl to up the functionality even more!

| LOUVERED ROOF SYSTEM

Some highlights of work we've done for forward-thinking clients.

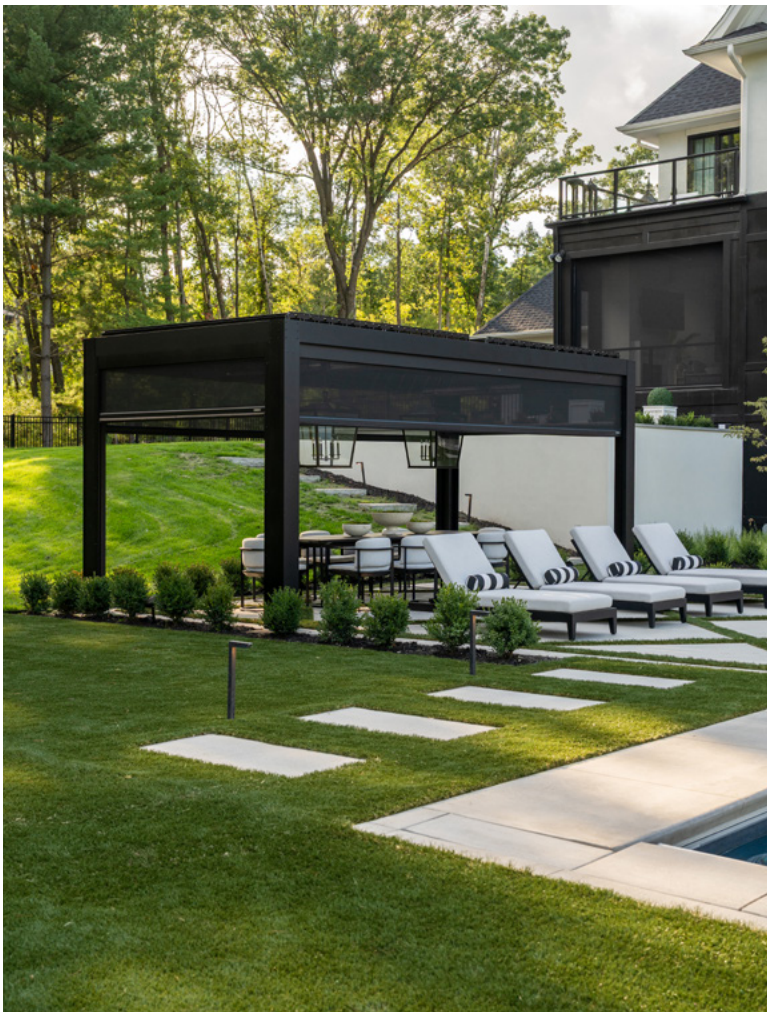

| ACCESSORIES

Complete your build with some of our integrated accessories

Heaters

With a variety of options from quality manufacturers such as Eurofase, Infratech and Bromic, you are able to choose the correct heater to suit your style and needs. Choose from power outputs ranging from 1,600 W to 4,000 W.

Heaters are available in 120 V, 208 V and 240 V options. Additional products are available for special order.

Lighting

Suncoast products are designed to meet various lighting needs with pot light, rope light and track lighting options available. Third-party lights can also be added.

Sensors

Rain and wind sensors can be built into the control system of the Louvered Roofs and Retractable Screens. Open and close functions are automated to perform even when you are not around to close everything up in high winds or rain.

Close the blades and lower the screens as soon as the first few drops land.

Fans

For warmer climates, our framing and accessory beams are designed to handle fan mounting. Suncoast options are available or customer-supplied fans can also be mounted.

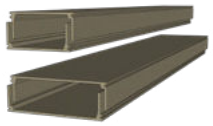

Accessory Beam

Accessory beams are installed where add-ons are desired but no mounting location is available. Wiring for accessories can be run inside the beam.

Smart Home Automation

Suncoast products are designed to be compatible with smart home and automation systems. Use the app to control your Retractable Screens and Louvered Roof from anywhere, or take advantage of voice activation through Google or Alexa.

| MANUFACTURING

Every Suncoast Retractable Screen and Louvered Roof System is fully custom-built to the exact dimensions of your space. Precise on-site measurements are taken and translated directly to our manufacturing facility, where each system is fabricated to ensure a flawless fit and seamless integration with your home or commercial structure.

For retractable screens, Suncoast accounts for floor slope and surface variations so the bottom bar makes consistent contact across the entire width. For louvered roofs, structural components, rotating louver blades, and integrated drainage systems are precision-engineered to ensure proper alignment, smooth operation, and long-term performance.

Our state-of-the-art CNC machinery, RF welding technology, and in-house fabrication processes allow Suncoast to deliver some of the most precise, durable, and high-quality outdoor living systems in the industry.

IN-HOUSE POWDER-COATING PROCESS

By bringing powder coating in-house with our state-of-the-art coating line, Suncoast now ensures superior finish quality and reliable color availability. Using premier powder coating materials and a highly regulated application procedure, we provide our customers with the best finish available in terms of consistency, durability, and resistance to the elements. Suncoast powder coating standards meet even the most demanding requirements with an AAMA 2604 rating.

| THE TEAM

The people who make everything happen.

Our manufacturing team is the best in the industry because of their commitment to quality, efficiency, and customer satisfaction. With years of experience and a passion for innovation, they consistently produce products that meet the highest standards of excellence. Their advanced technology and attention to detail ensure that every product is manufactured to exact specifications and delivered on time. Furthermore, they maintain a strong culture of continuous improvement, regularly evaluating and updating their processes to stay ahead of the competition. With our manufacturing team at the forefront of the industry, we are able to provide our customers with exceptional products and service.

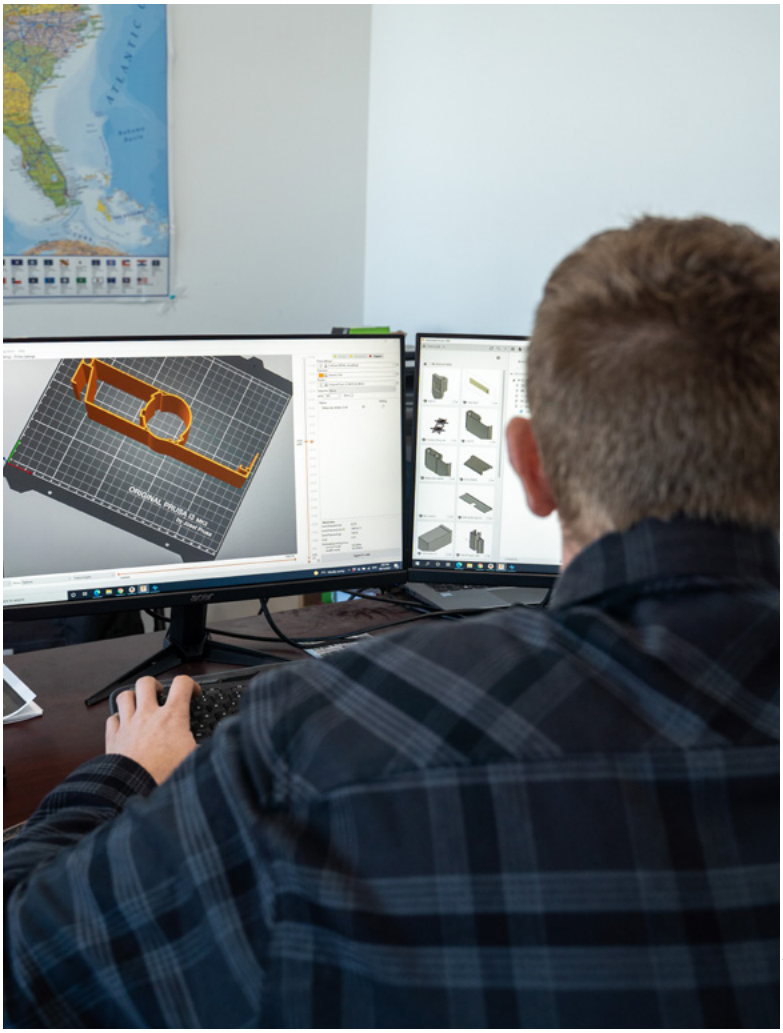

SUNCOAST

+1 877 449 5106 | suncoastenclosures.com