SUNCOAST

FIXED SCREEN WALLS

Creating exceptional residential enclosures for any application

| TABLE OF CONTENTS

04 ABOUT US

06 PRODUCT: FIXED SCREEN WALLS

13 ACCESSORIES

15 MANUFACTURING

16 POWDER COATING

17 THE TEAM

| ABOUT US

Pushing the boundaries in luxury outdoor living

Suncoast is a premier manufacturer, supplier and builder of luxury outdoor enclosures. With over 30 years of experience building in demanding environments, Suncoast delivers reliable, high-quality outdoor enclosures built to last.

MANUFACTURING

Suncoast takes control of the manufacturing process to ensure the highest quality product tailored perfectly to your custom application. From cutting and coating to kitting and shipping, the Suncoast team ensures the reliable delivery of a structure built to last for many years.

PRODUCT DEVELOPMENT

We strive to be at the leading edge of the industry with respect to technology and style. That's why our product development team is continuously sourcing new profiles, parts and smart options to engineer functional and beautiful products.

| FIXED SCREEN WALLS

Block out the wind, bugs and sun, and enjoy enhanced privacy with fixed screen walls, customizable to any space.

SCREENS BLOCK UP TO
90% OF WIND

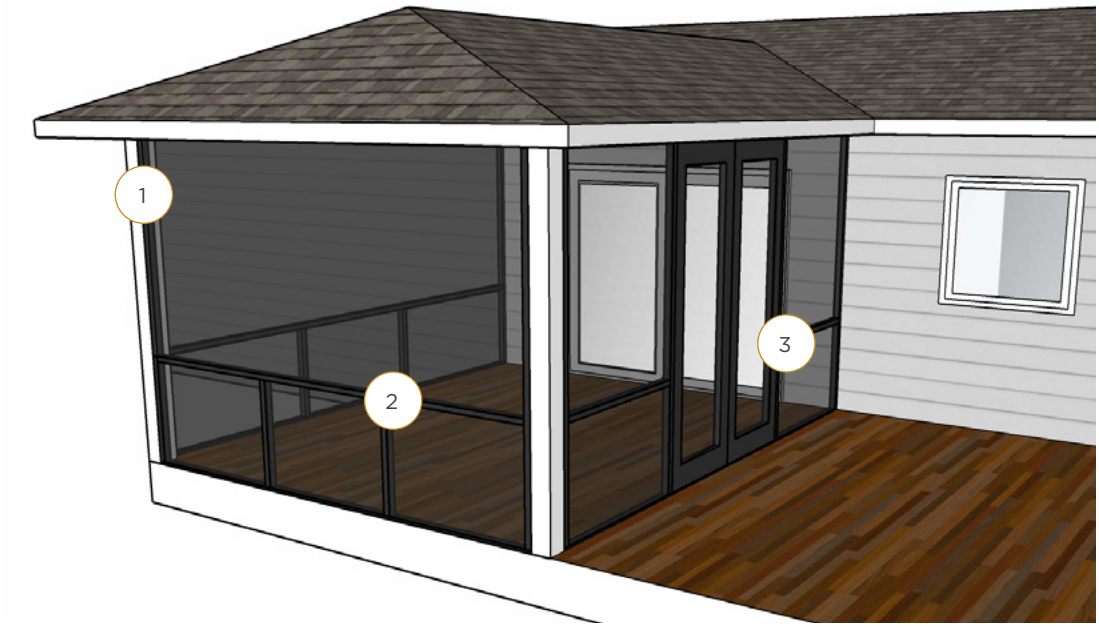

1.

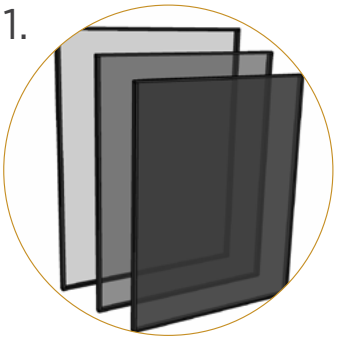

Various Screen Densities

- Choose from various screen densities based on the desired amount of wind, sun and bug control
- Made from PHIFER heavy-duty screen which is anti-bacterial, flame-retardant and Greenguard certified

2.

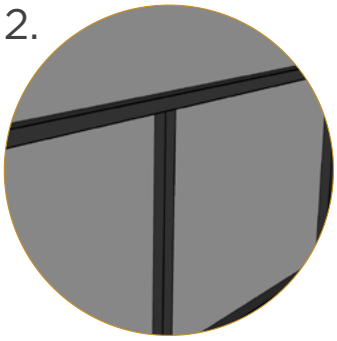

Aluminum Framing

- Aluminum frame allows for completely custom applications and can be built to the exact specifications of your outdoor space
- Framing creates a tight, rigid screen that will stand the test of time
- Custom industrial aluminum chair rails to provide additional safety and support

3.

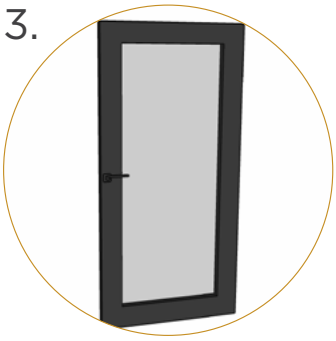

Screen Doors

- Aluminum-framed screen doors create ease of access in and out of your space

POWDER-COATED ALUMINUM-FRAME COLORS

Black | Grey | White | Linen | Tan | Mocha | Custom

FIXED SCREEN WALLS

| ACCESSORIES

Complete your build with some of our integrated accessories

Heaters

With a variety of options from quality manufacturers such as Eurofase, Infratech and Bromic, you are able to choose the correct heater to suit your style and needs. Choose from power outputs ranging from 1,600 W to 4,000 W.

Heaters are available in 120 V, 208 V and 240 V options. Additional products are available for special order.

Lighting

Suncoast products are designed to meet various lighting needs with pot light, rope light and track lighting options available. Third-party lights can also be added.

Sensors

Rain and wind sensors can be built into the control system of the Louvered Roofs and Retractable Screens. Open and close functions are automated to perform even when you are not around to close everything up in high winds or rain.

Close the blades and lower the screens as soon as the first few drops land.

Fans

For warmer climates, our framing and accessory beams are designed to handle fan mounting. Suncoast options are available or customer-supplied fans can also be mounted.

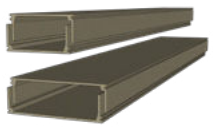

Accessory Beam

Accessory beams are installed where add-ons are desired but no mounting location is available. Wiring for accessories can be run inside the beam.

Smart Home Automation

Suncoast products are designed to be compatible with smart home and automation systems. Use the app to control your Retractable Screens and Louvered Roof from anywhere, or take advantage of voice activation through Google or Alexa.

| MANUFACTURING

Every Suncoast Retractable Screen and Louvered Roof System is fully custom-built to the exact dimensions of your space. Precise on-site measurements are taken and translated directly to our manufacturing facility, where each system is fabricated to ensure a flawless fit and seamless integration with your home or commercial structure.

For retractable screens, Suncoast accounts for floor slope and surface variations so the bottom bar makes consistent contact across the entire width. For louvered roofs, structural components, rotating louver blades, and integrated drainage systems are precision-engineered to ensure proper alignment, smooth operation, and long-term performance.

Our state-of-the-art CNC machinery, RF welding technology, and in-house fabrication processes allow Suncoast to deliver some of the most precise, durable, and high-quality outdoor living systems in the industry.

IN-HOUSE POWDER-COATING PROCESS

By bringing powder coating in-house with our state-of-the-art coating line, Suncoast now ensures superior finish quality and reliable color availability. Using premier powder coating materials and a highly regulated application procedure, we provide our customers with the best finish available in terms of consistency, durability, and resistance to the elements. Suncoast powder coating standards meet even the most demanding requirements with an AAMA 2604 rating.

| THE TEAM

The people who make everything happen.

Our manufacturing team is the best in the industry because of their commitment to quality, efficiency, and customer satisfaction. With years of experience and a passion for innovation, they consistently produce products that meet the highest standards of excellence. Their advanced technology and attention to detail ensure that every product is manufactured to exact specifications and delivered on time. Furthermore, they maintain a strong culture of continuous improvement, regularly evaluating and updating their processes to stay ahead of the competition. With our manufacturing team at the forefront of the industry, we are able to provide our customers with exceptional products and service.

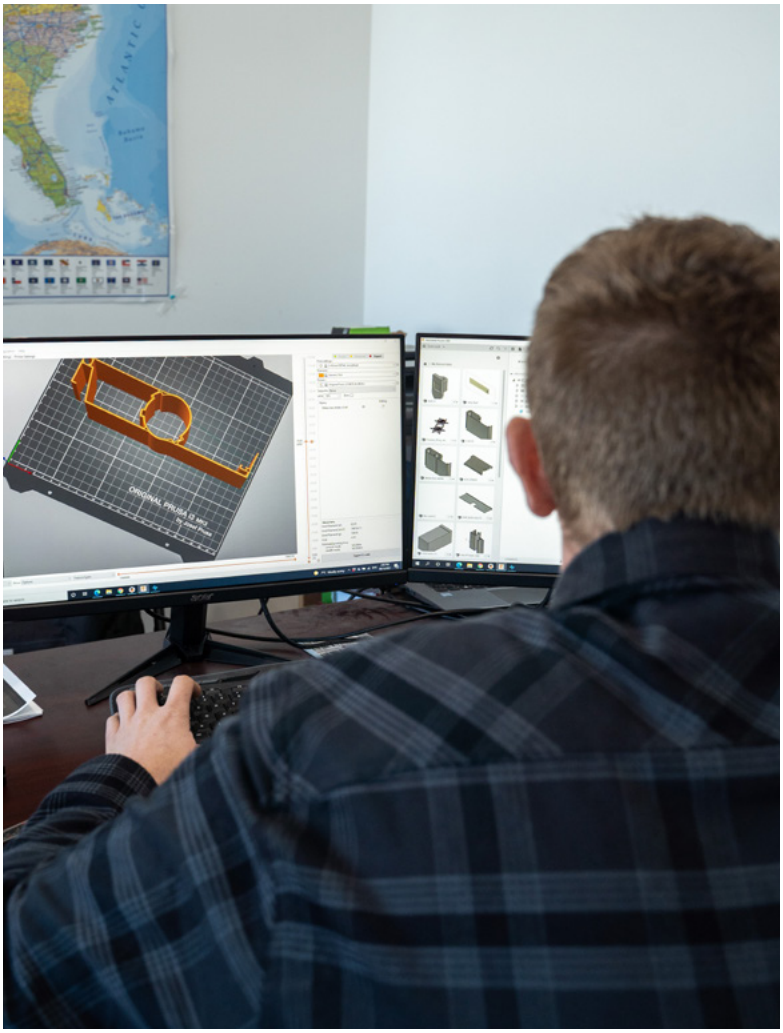

SUNCOAST

+1 877 449 5106 | suncoastenclosures.com