SUNCOAST

PRODUCT CATALOGUE

BETTER
OUTDOOR
LIVING

Creating exceptional residential enclosures for any application

| TABLE OF CONTENTS

04 ABOUT US

06 PRODUCT: LOUVERED ROOF

18 PRODUCT: RETRACTABLE SCREEN/VINYL

30 PRODUCT: 3 SEASON ROOM

38 PRODUCT: FIXED SCREENS

42 PRODUCT: POLYCARBONATE ROOF

46 ACCESSORIES

48 MANUFACTURING

49 POWDER COATING

50 THE TEAM

| ABOUT US

Pushing the boundaries in luxury outdoor living

Suncoast is a premier manufacturer, supplier and builder of luxury outdoor enclosures. With over 30 years of experience building in the harshest Canadian environments, you can count on dependable quality for your next deck, patio, enclosure or project.

MANUFACTURING

Suncoast takes control of the manufacturing process to ensure the highest quality product tailored perfectly to your custom application. From cutting and coating to kitting and shipping, the Suncoast team ensures the reliable delivery of a structure built to last for many years.

PRODUCT DEVELOPMENT

We strive to be at the leading edge of the industry with respect to technology and style. That's why our product development team is continuously sourcing new profiles, parts and smart options to engineer functional and beautiful products.

LOUVERED ROOF SYSTEM

Enjoy the sunshine with the option of shade on demand

Completely customizable. Maintenance-free. All of our Louvered Roof Systems are designed and engineered to withstand local snow loads and wind speeds.

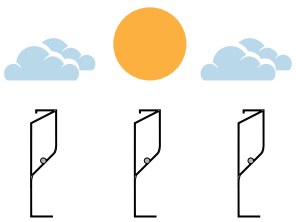

FULL SUNSHINE WHEN IT'S COOL

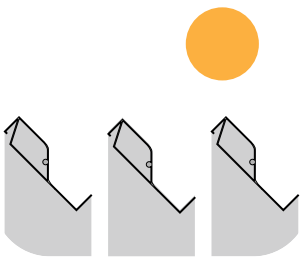

SHADE WHEN IT'S HOT

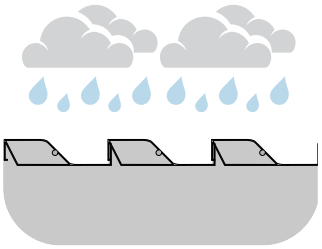

DRY WHEN IT'S RAINING

1.

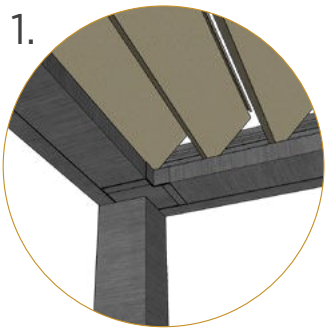

All-Aluminum Frame

- Structural grade materials.
- Engineered profiles.

2.

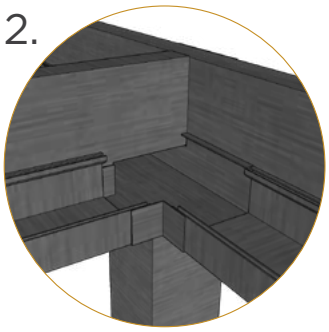

Multi-Zone Drainage

- Louver blades drain into internal gutter.
- Unrestricted zone to zone water flow.

3.

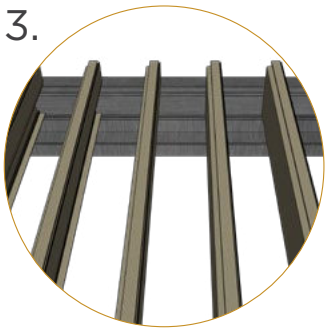

Maximum Sunlight

- 8” blade spacing provides industry-leading louver blade opening.

4.

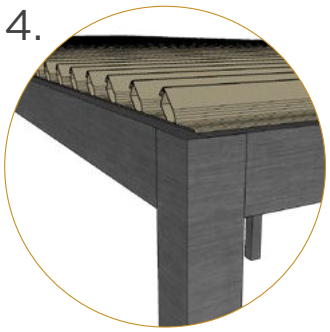

Robust Components

- Our 6x6 posts and 2x8 or 4x8 beams are standard.
- Other options available for higher demand situations.

5.

Hidden Motor

- A dedicated blade in each zone houses the drive motor.
- No external arms, levers or pistons.

6.

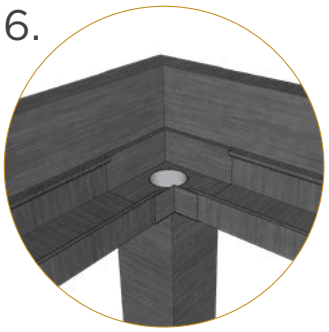

Integrated Gutter

- Integrated internal gutter system.
- Gutter fixed internal to frame.
- Downspout hidden inside post.

Frame Specifications and Tolerances

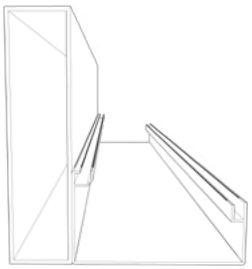

2 x 8 Frame with Internal Gutter

- Span up to 16’ between posts.
- The integrated gutter is fastened to the beam and includes chases for motor wiring and ambient light strip.

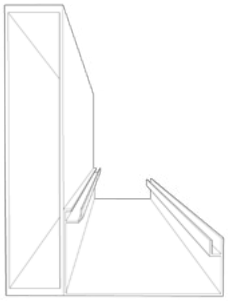

2 x 10 Frame with Internal Gutter

- Span up to 20’ between posts.

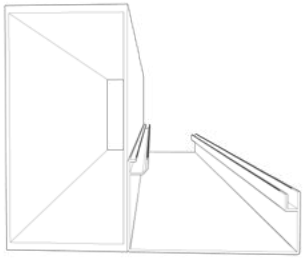

4 x 8 Frame with Internal Gutter

- Span up to 26’ between posts.

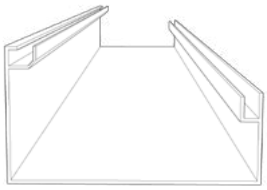

Gutter with Light Track and Wire Chase

- Louver Gutter with optional built-in LED light strip.

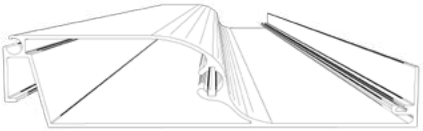

Louver Blade

- Depending on local snow load ratings, blades can span up to 15’.
- Weather stripping on each blade ensures a tight seal and a quiet interface.

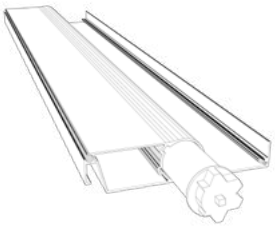

Louver Motor Blade

- A Motor Blade houses the High Torque, Italian-made Gaposa motor. Motors and electrical components are CSA approved.
- Control up to 225 sqft with one motor.

Color Options

Suncoast offers 3 stylish standard powder coating colour options as well as any custom color which can be found in the RAL pallet. Special order on textures and prints such as wood grain are also available.

Black | Grey | White | Linen | Tan | Mocha | Custom

We are pleased to offer our Industry-Leading Limited Lifetime Warranty. For more information please visit our website at suncoastenclosures.com

We know the best results come from bold ideas. Our Louvered Roof System pushes the boundaries of innovation, durability and dependability

INDUSTRIAL STRENGTH

Industrial strength structural aluminum is used on our framing extrusions to ensure the most dependable and sturdy structures on the market. Our 6x6 posts and 2x8 or 4x8 beams are standard with other options available for higher demand situations. Suncoast louver blades are the widest available at 8 inches and can span an impressive 15 feet.

DRAINAGE

Each louver zone is surrounded by a gutter system fastened to the beam with a seamless look. When louver blades are in the closed position, water is directed to the perimeter of the zones where it flows to the desired drainage location. Downspouts can be hidden inside the structural post.

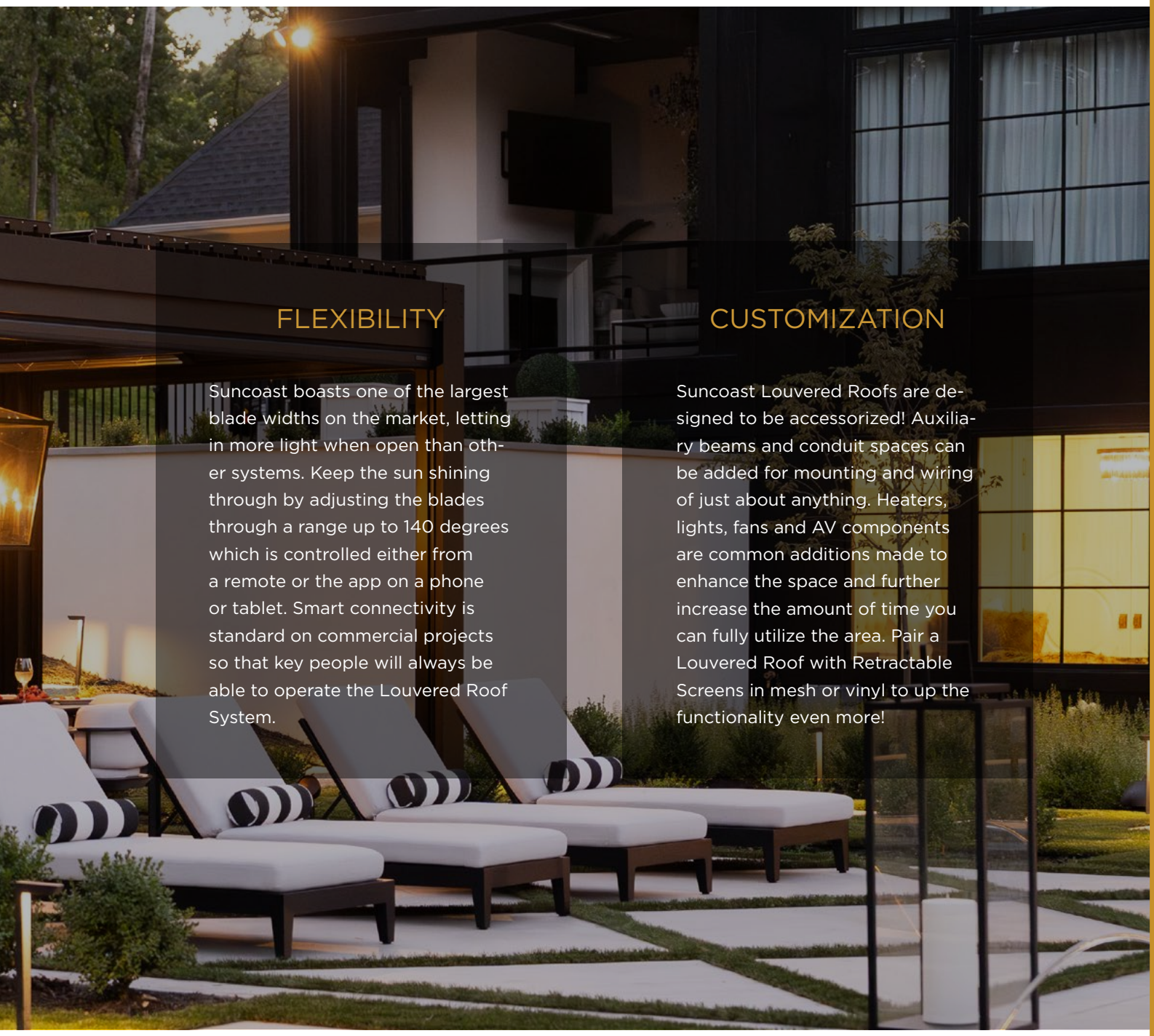

FLEXIBILITY

Suncoast boasts one of the largest blade widths on the market, letting in more light when open than other systems. Keep the sun shining through by adjusting the blades through a range up to 140 degrees which is controlled either from a remote or the app on a phone or tablet. Smart connectivity is standard on commercial projects so that key people will always be able to operate the Louvered Roof System.

CUSTOMIZATION

Suncoast Louvered Roofs are designed to be accessorized! Auxiliary beams and conduit spaces can be added for mounting and wiring of just about anything. Heaters, lights, fans and AV components are common additions made to enhance the space and further increase the amount of time you can fully utilize the area. Pair a Louvered Roof with Retractable Screens in mesh or vinyl to up the functionality even more!

| LOUVERED ROOF SYSTEM

Some highlights of work we've done for forward-thinking clients

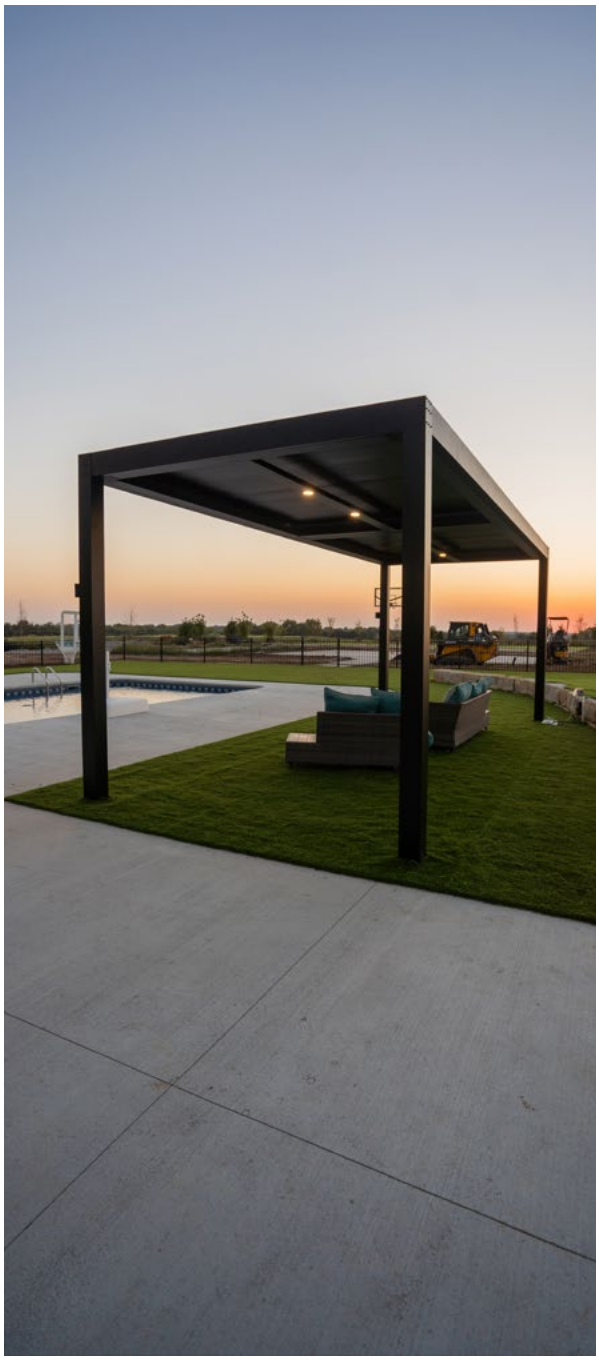

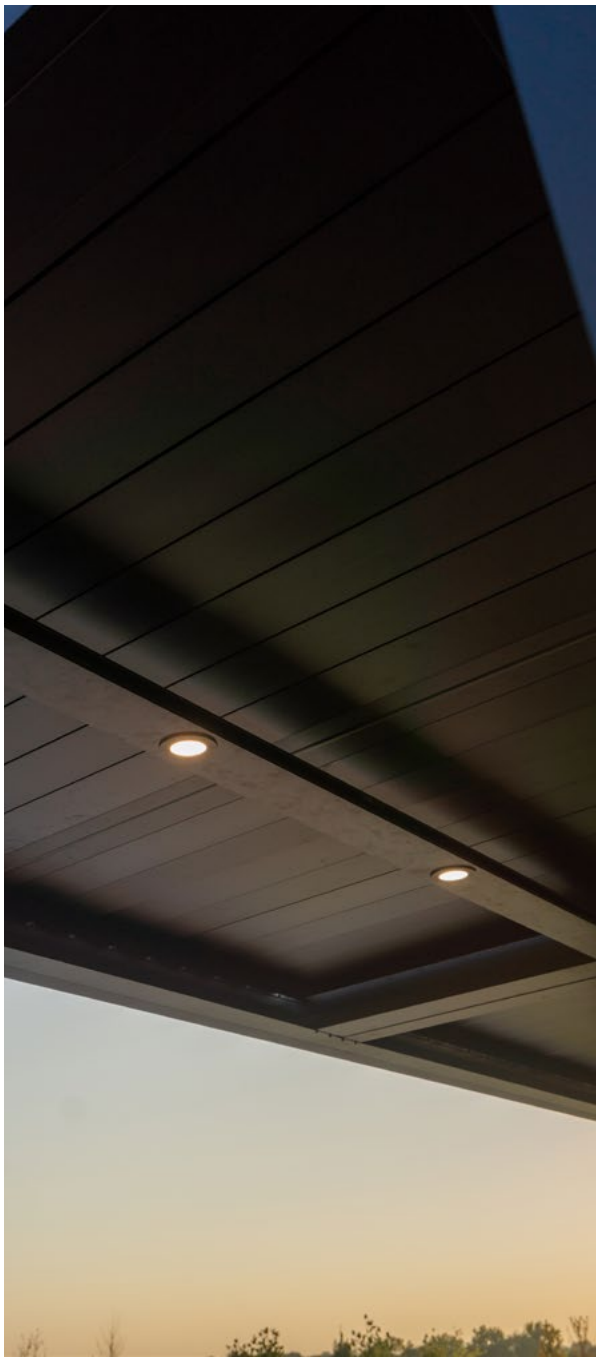

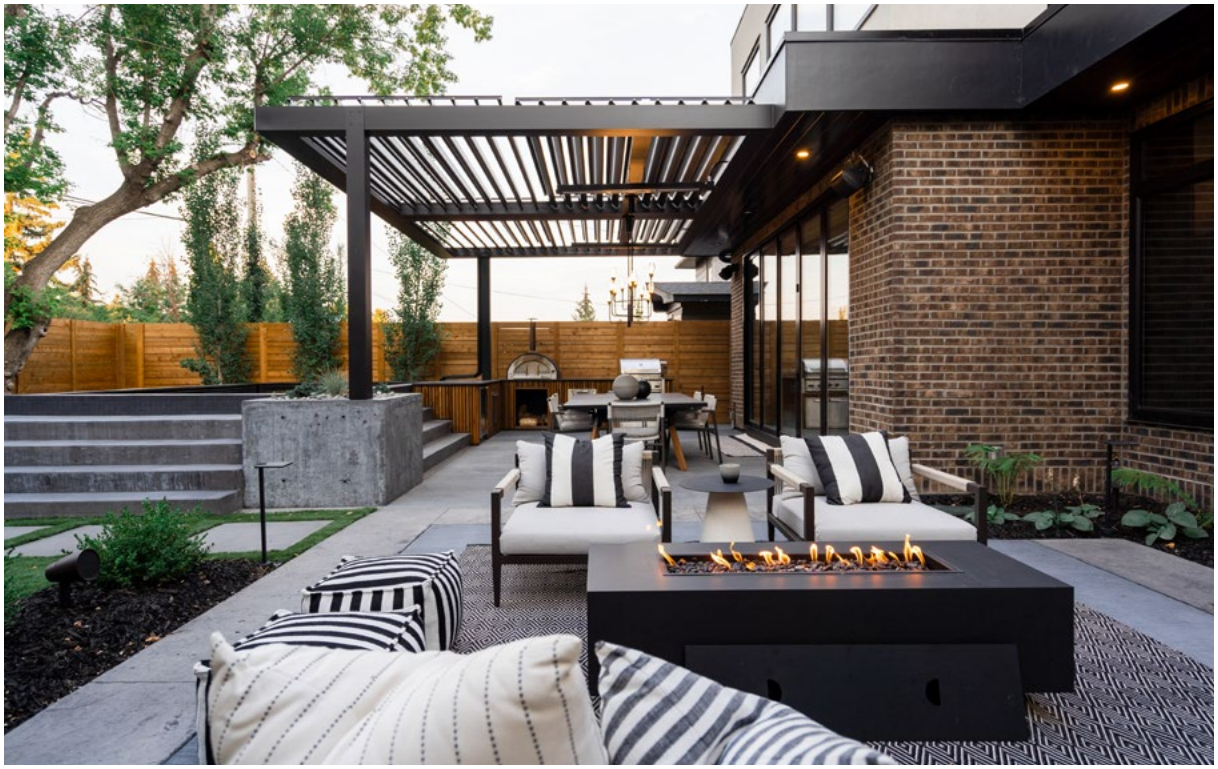

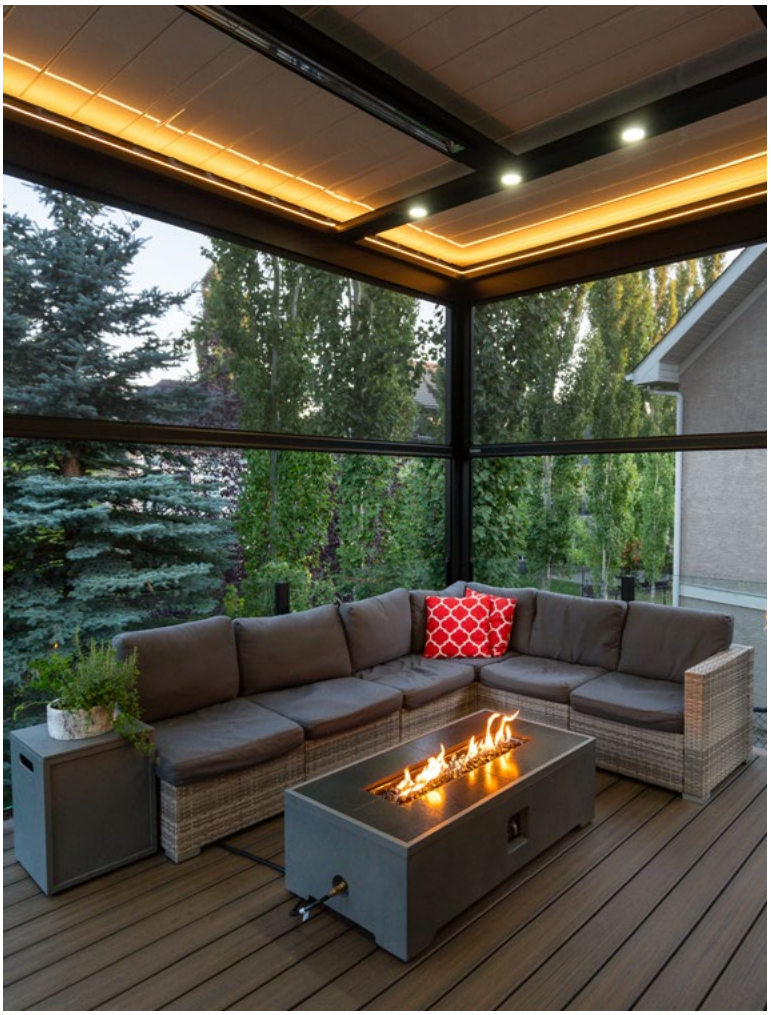

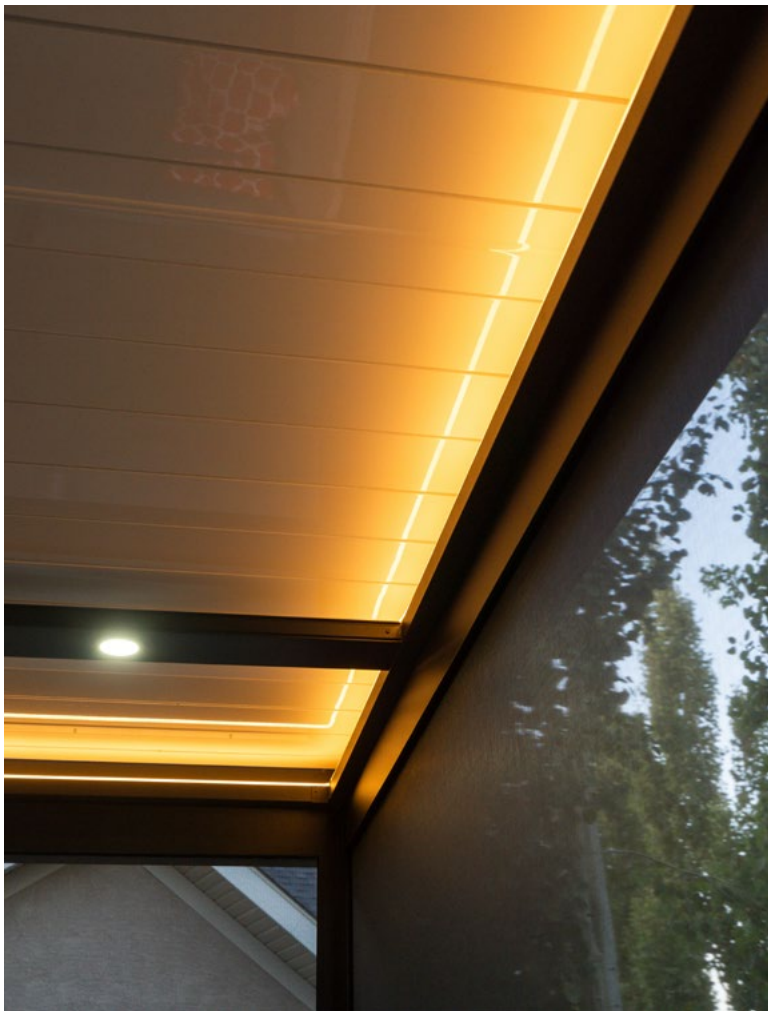

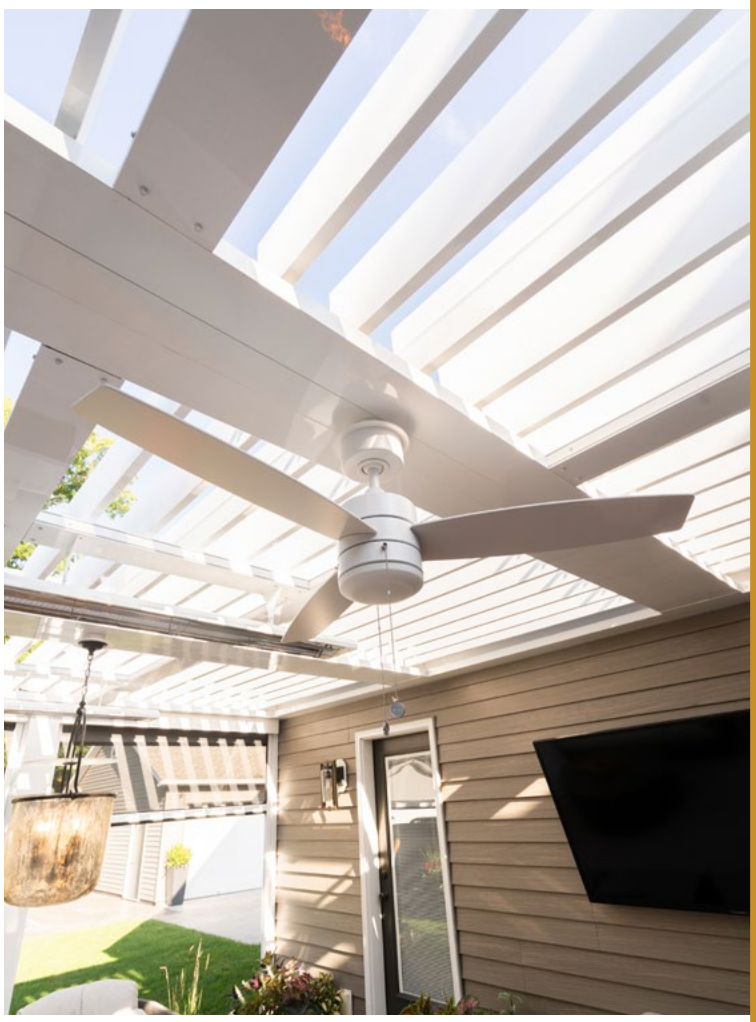

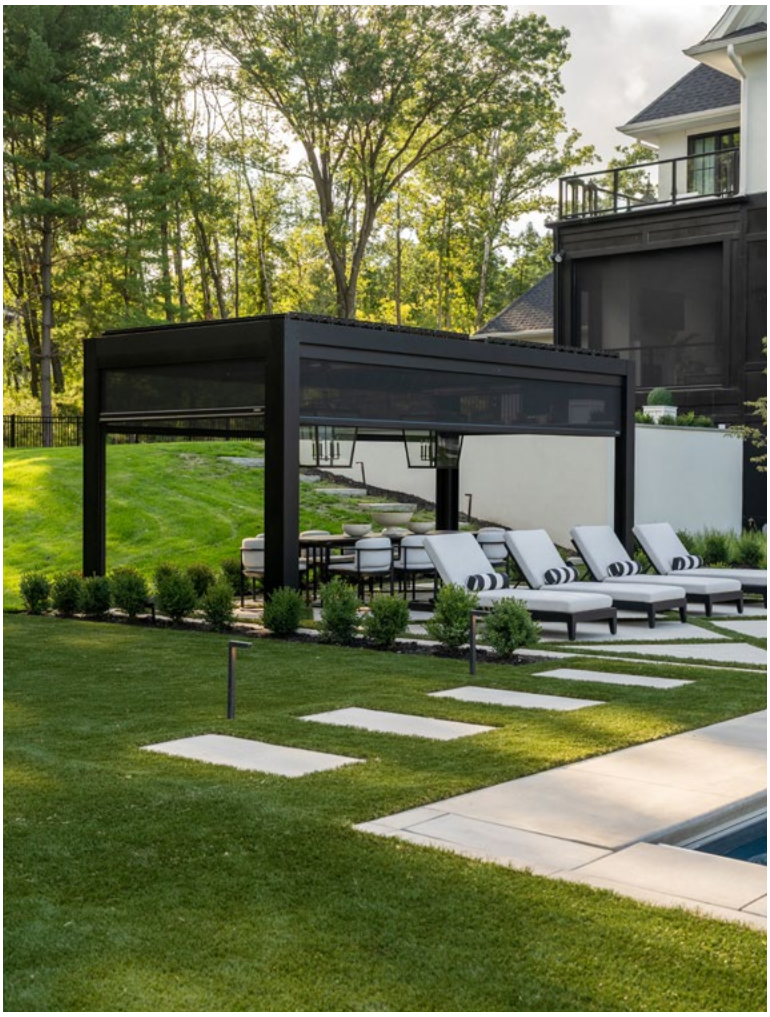

| RETRACTABLE SCREENS/VINYL

Enjoy a fully enclosed patio with the touch of a button. Or keep it open and enjoy the breeze

Don’t worry about the weather. No need to send your guests away if the rain comes. Simply lower the Retractable Vinyl Screens and enjoy a warm, dry, enclosed space.

WIND PROTECTION
SOLAR SHADE
BUG FREE
PRIVACY
CLIMATE CONTROL

1.

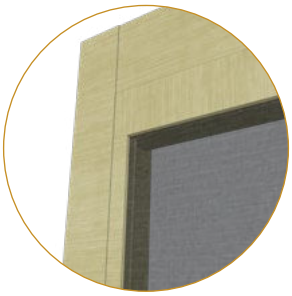

Seamless Integration

- Flush to frame roller housing and track.
- 5.5” and 7” Housing have round and square housing options.

2.

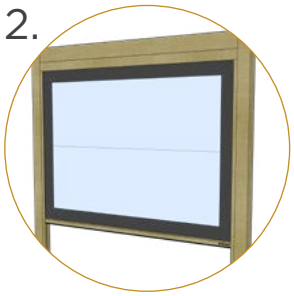

Mesh and Vinyl

- Full Vinyl, Windowed and Boardered.

3.

Custom Openings

- Build into existing frames such as timber frames and stone columns.
- Mesh options 60-95% density.

4.

Sealed Bottom

- Weather-sealed bottom bar in either rubber gasket or bristle brush.
- Bottom bar slopped to match surface gradient.
- Obstruction sensing motor.

Housing Sizes and Spans

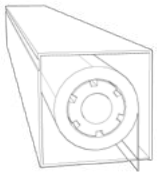

5.5” Square Housing

For spans up to 22ft and drops up to 11ft.

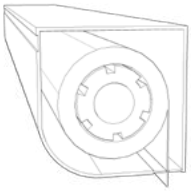

7” Round Housing

For spans up to 30ft and drops up to 20ft.

Weighted bottom bar weather seal options:

- 3” rubber gasket
- 2” rubber gasket
- nylon brush

Surface mounted tracks fixed to Suncoast aluminum frames, existing posts and a large variety of exterior siding.

Cable guided track system for frameless applications.

Recessed tracks for screens fixed to stone, brick or other deep materials.

Mesh and vinyl screens are rated for winds up to 100KM/H or 65MPH and can also be fitted with intelligent options to retract automatically in higher winds.

Aluminum Colour Options and Screen Densities

Screen density selection is largely utility driven. Bug protection requires a low density mesh while a higher density would be more appropriate for wind deflection. Privacy may also be a considering factor in selection. In addition to mesh, our vinyl screens are an excellent option for residential applications where 3-Season operation is the target.

Suncoast uses mesh made in the USA by Phifer, an industry leader in screens and outdoor fabrics. The vinyl coated fiberglass mesh is anti-mold/mildew and UV resistant.

RETRACTABLE POWER SCREEN CONFIGURATIONS

SCREEN DENSITIES RANGE FROM 55-100%

TUFF SCREEN

SUNTEX 80

SUNTEX 90

SUNTEX 95

VINYL

Black

Grey

White

Linen

Tan

Mocha

Custom

We are pleased to offer our Industry-Leading Limited Lifetime Warranty. For more information please visit our website at suncoastenclosures.com

| RETRACTABLE SCREENS/VINYL

Where innovation and technology meet. Our passion to push the boundaries allows us to create the best product possible for our clients and their homes

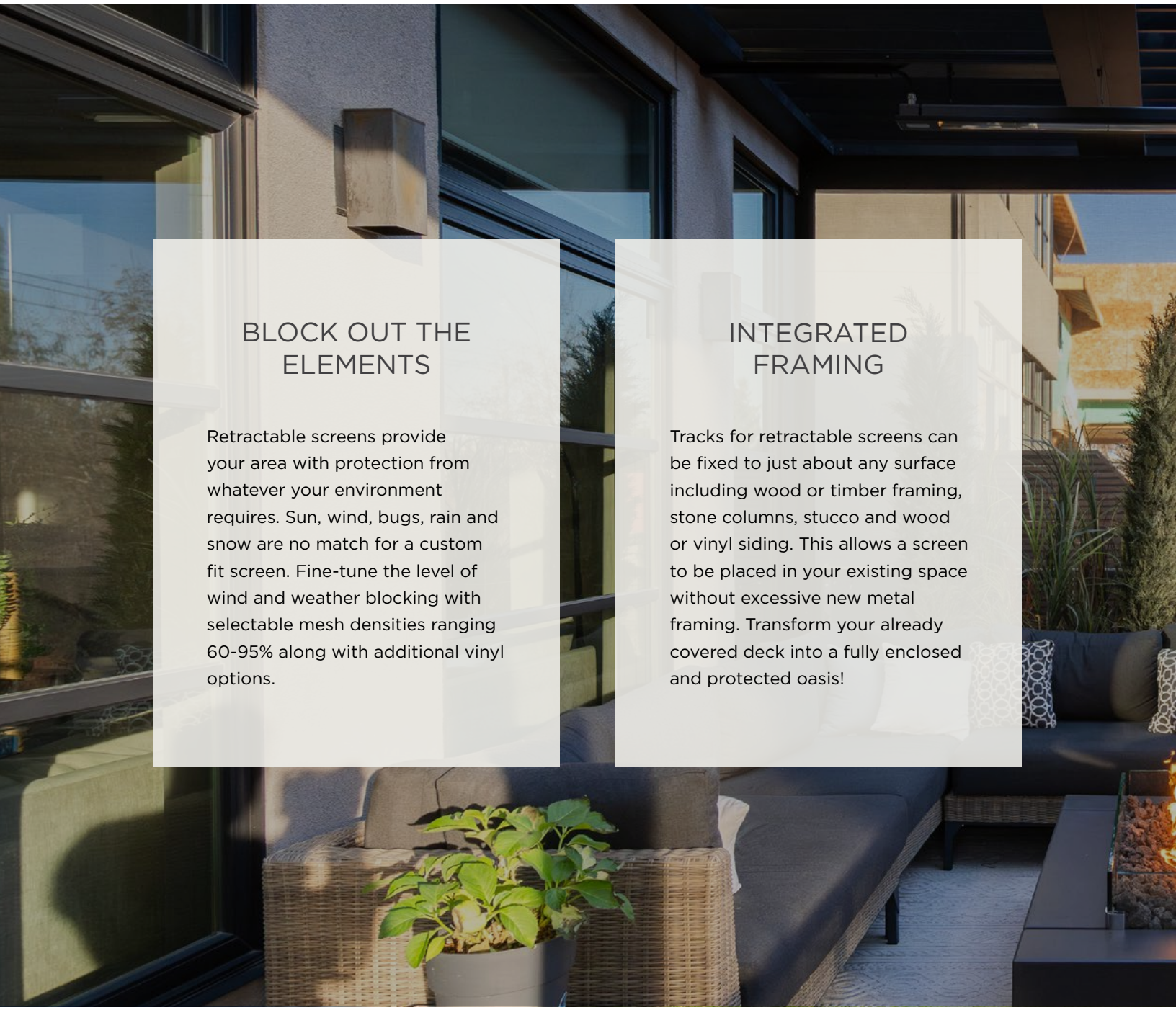

BLOCK OUT THE ELEMENTS

Retractable screens provide your area with protection from whatever your environment requires. Sun, wind, bugs, rain and snow are no match for a custom fit screen. Fine-tune the level of wind and weather blocking with selectable mesh densities ranging 60-95% along with additional vinyl options.

INTEGRATED FRAMING

Tracks for retractable screens can be fixed to just about any surface including wood or timber framing, stone columns, stucco and wood or vinyl siding. This allows a screen to be placed in your existing space without excessive new metal framing. Transform your already covered deck into a fully enclosed and protected oasis!

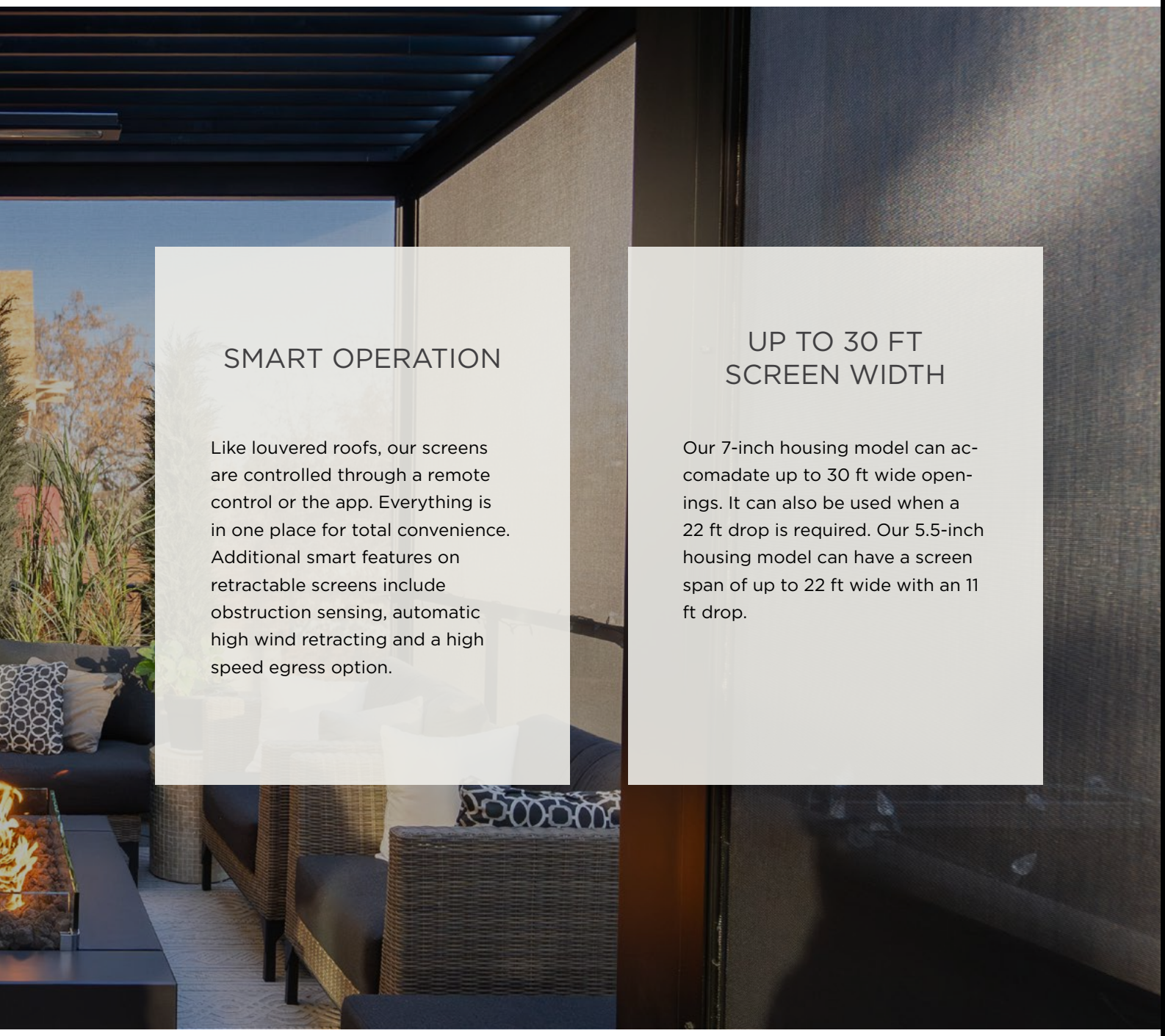

SMART OPERATION

Like louvered roofs, our screens are controlled through a remote control or the app. Everything is in one place for total convenience. Additional smart features on retractable screens include obstruction sensing, automatic high wind retracting and a high speed egress option.

UP TO 30 FT SCREEN WIDTH

Our 7-inch housing model can accomadate up to 30 ft wide openings. It can also be used when a 22 ft drop is required. Our 5.5-inch housing model can have a screen span of up to 22 ft wide with an 11 ft drop.

| RETRACTABLE SCREENS/VINYL

Some highlights of work we've done for forward-thinking clients

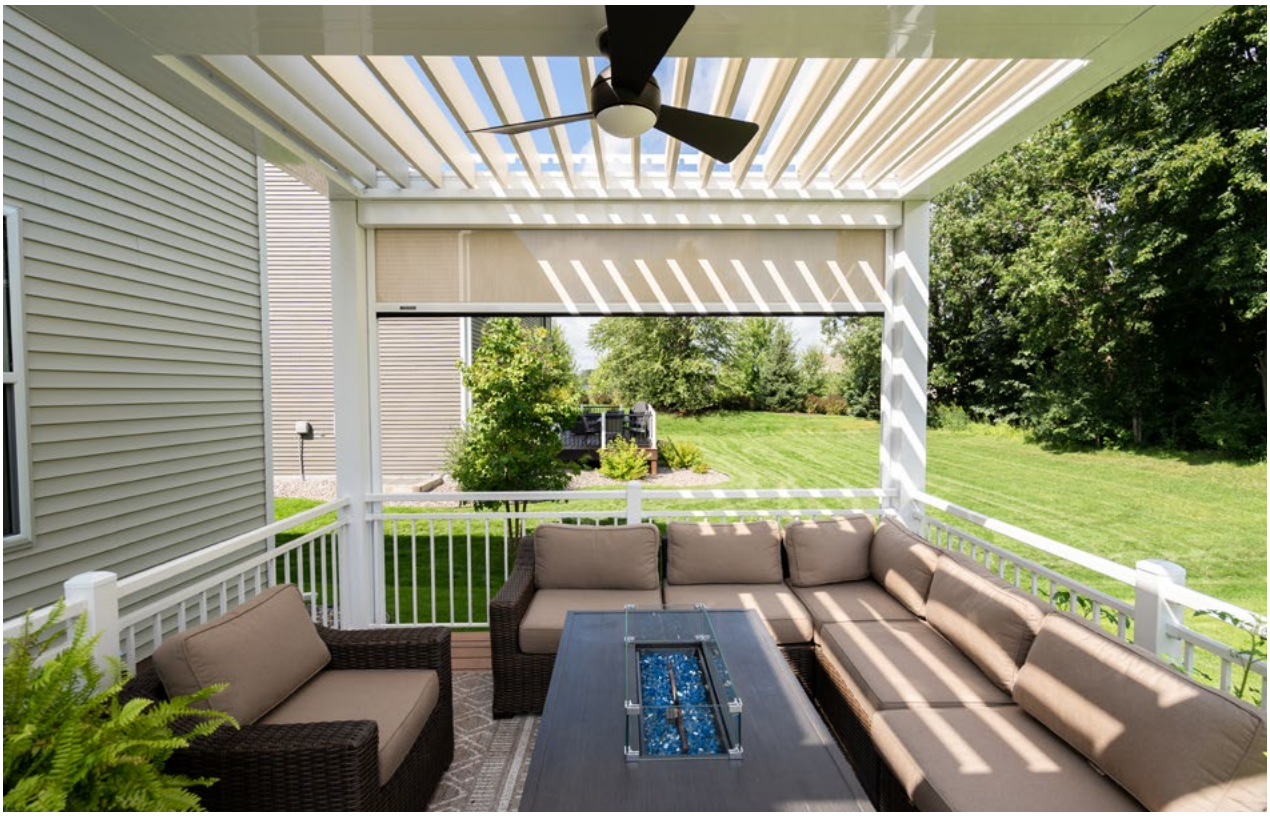

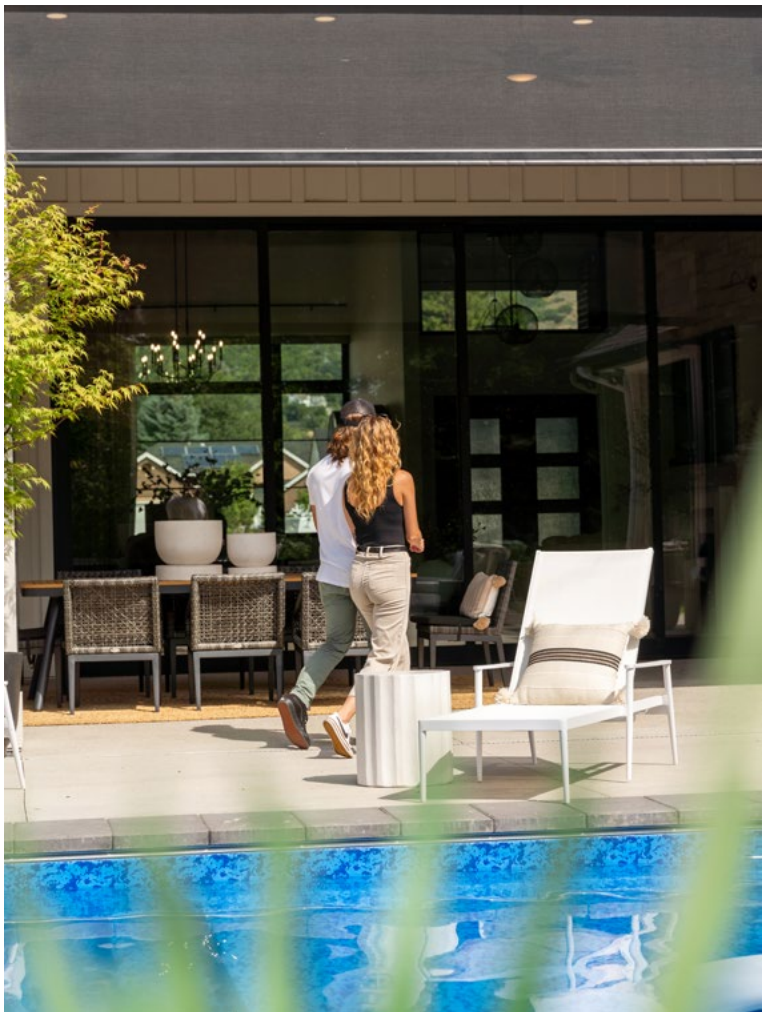

SUNCOAST | BUILT™

| 3-SEASON ROOMS

Have the versatility to completely weather seal your outdoor space or open the windows to enjoy the breeze

Suncoast 3-Season rooms are designed and engineered to give you the ultimate flexibility while still maintaing a weather sealed and bug tight environment.

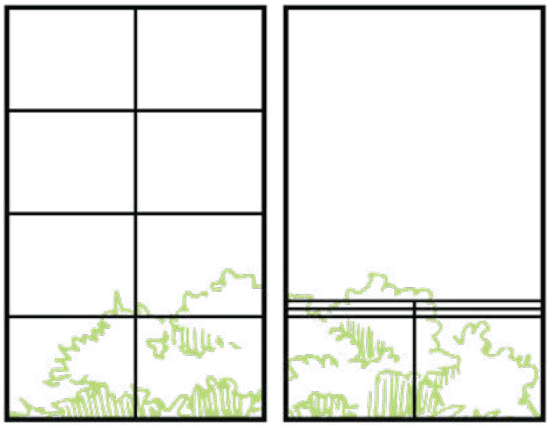

TOTAL WIND BLOCK

INCREASE PRIVACY

VENTILATION OPTIONS

EXTEND OUTDOOR LIVING

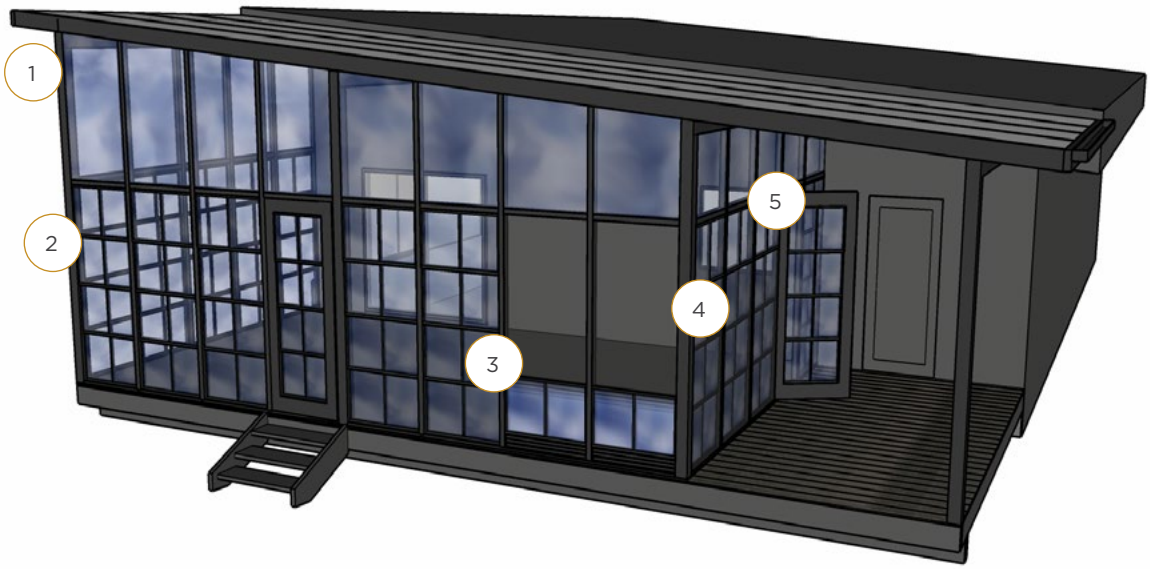

1.

Fixed Pannel

- Custom vinyl window panels to fill any additional space.

2.

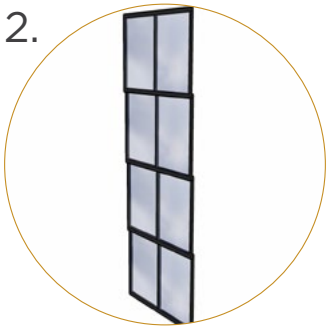

3-Season Windows

- 3-Season Windows made of aluminum frame and vinyl.
- Completely weather sealed when closed.

3.

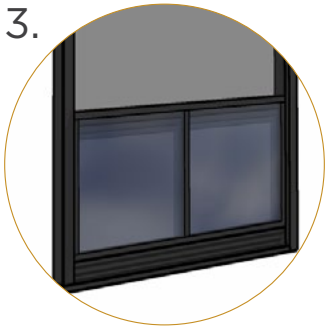

75% Window Opening

- Open up to 75% of the space when all the vinyl windows are slid to the bottom.

4.

Vinyl Tint Options

- 2 vinyl tint options: clear and smoke.

5.

3-Season

- Made of durable aluminum construction.
- Vinyl windows allow for ever more flexability.

Never compromise with the weather again. Enjoy a fully weather sealed space with the flexibility of full ventilation.

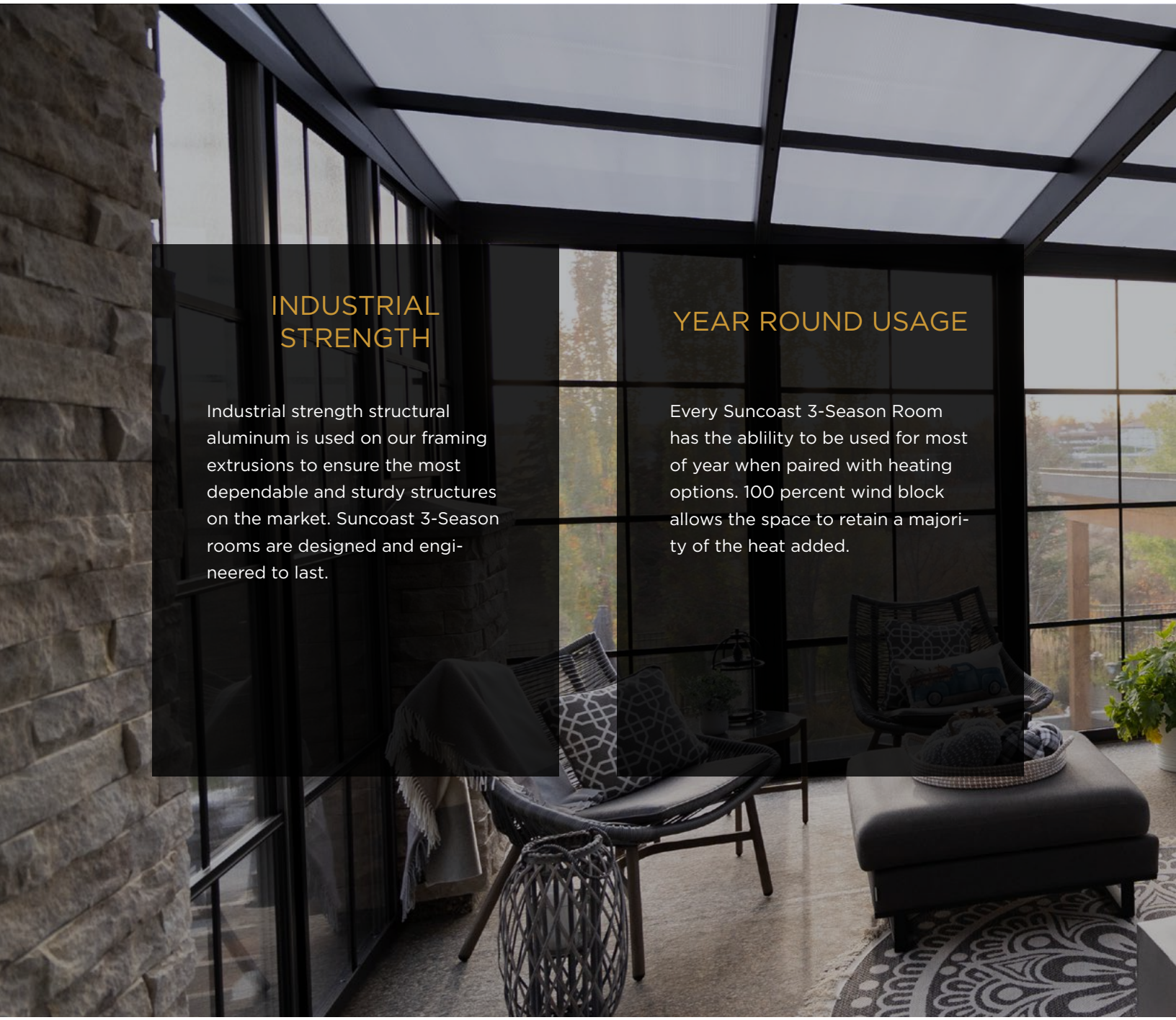

INDUSTRIAL STRENGTH

Industrial strength structural aluminum is used on our framing extrusions to ensure the most dependable and sturdy structures on the market. Suncoast 3-Season rooms are designed and engineered to last.

YEAR ROUND USAGE

Every Suncoast 3-Season Room has the ablility to be used for most of year when paired with heating options. 100 percent wind block allows the space to retain a majority of the heat added.

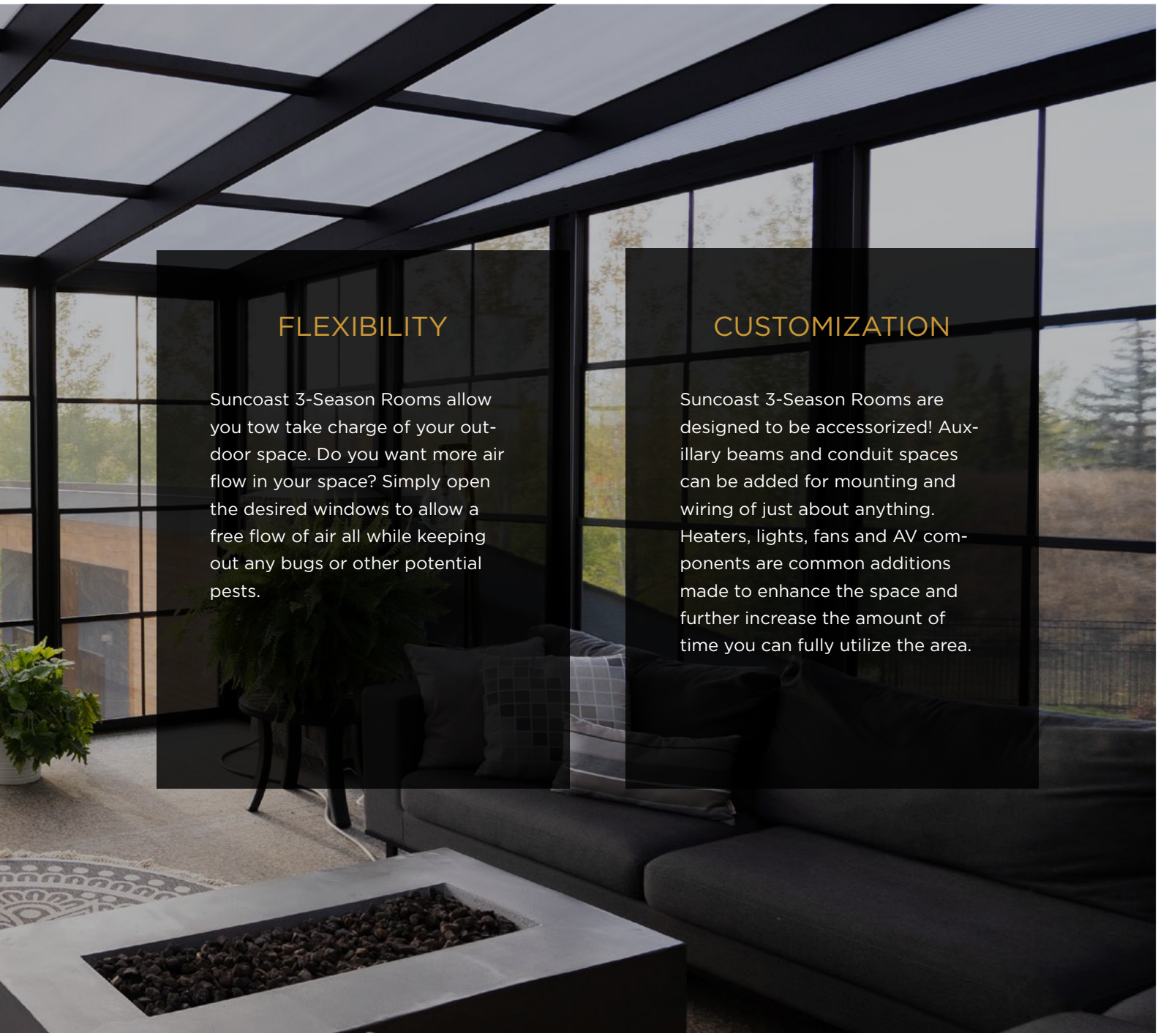

FLEXIBILITY

Suncoast 3-Season Rooms allow you tow take charge of your outdoor space. Do you want more air flow in your space? Simply open the desired windows to allow a free flow of air all while keeping out any bugs or other potential pests.

CUSTOMIZATION

Suncoast 3-Season Rooms are designed to be accessorized! Auxillary beams and conduit spaces can be added for mounting and wiring of just about anything. Heaters, lights, fans and AV components are common additions made to enhance the space and further increase the amount of time you can fully utilize the area.

| 3-SEASON ROOMS

Some highlights of work we've done for forward thinking clients.

| FIXED SCREEN WALLS

Block out the wind, bugs, sun, and enjoy enhanced privacy with fixed screen walls - customizable to any space.

SCREENS BLOCK UP TO
90% OF WIND

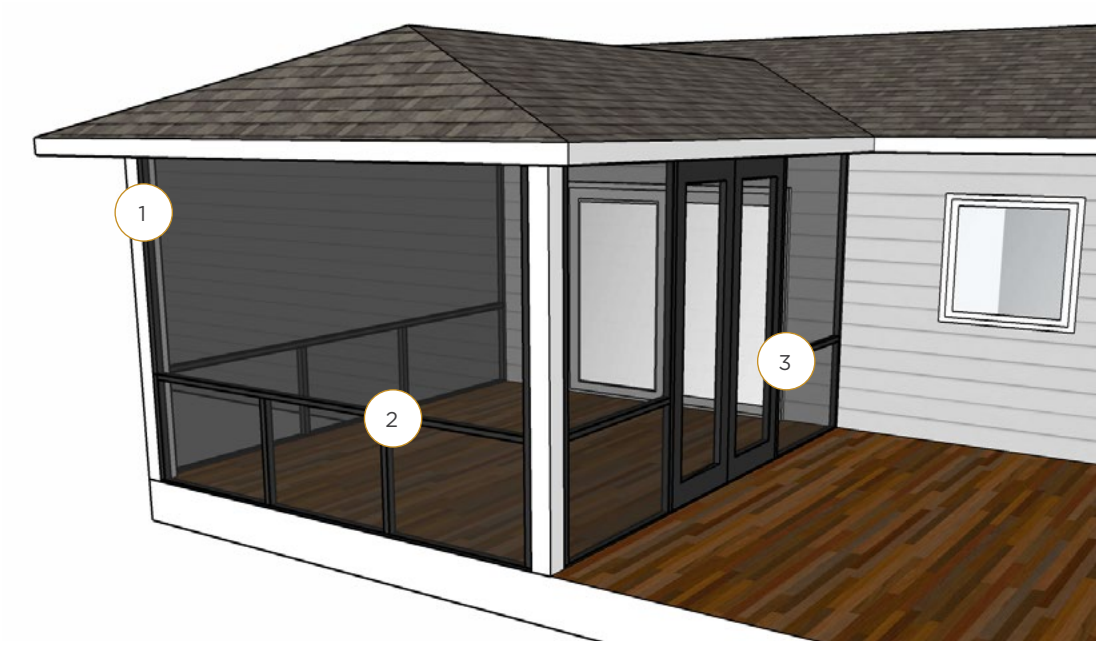

1.

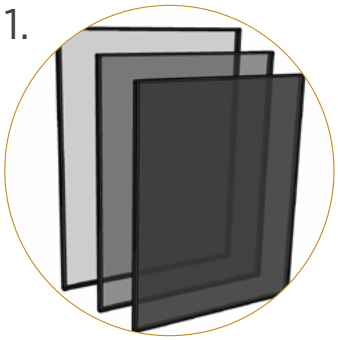

Various Screen Densities

- Choose from various screen densities based upon the desired amount of wind block needed.

2.

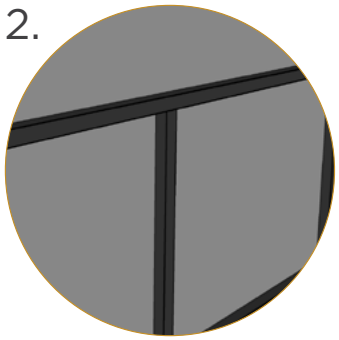

Custom Chair Rails

- Custom industrial aluminum chair rails to add additional safey and support.

3.

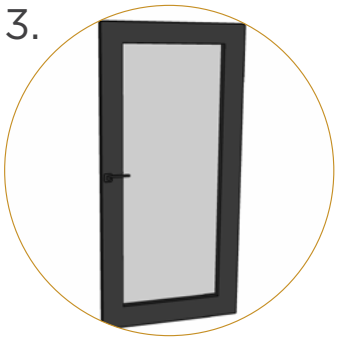

Screen Doors

- Aluminum framed screen doors create ease of access in and out of your space.

Features:

1. Suncoast Screen Walls offer a great cost-effective way to enclose your outdoor space. Block out the bugs, sun, wind and enjoy fantastic privacy without obstrucing your view. All of Suncoast 3-Season Rooms are made from PHIFER Heavy-Duty Screen which is anti-bacterial, flame-retardent and Greenguard certified.
2. The aluminum frame used allows for completely custom applications and built to the exact specifications of your outdoor space. This framing creates a tight, rigid screen that will last.

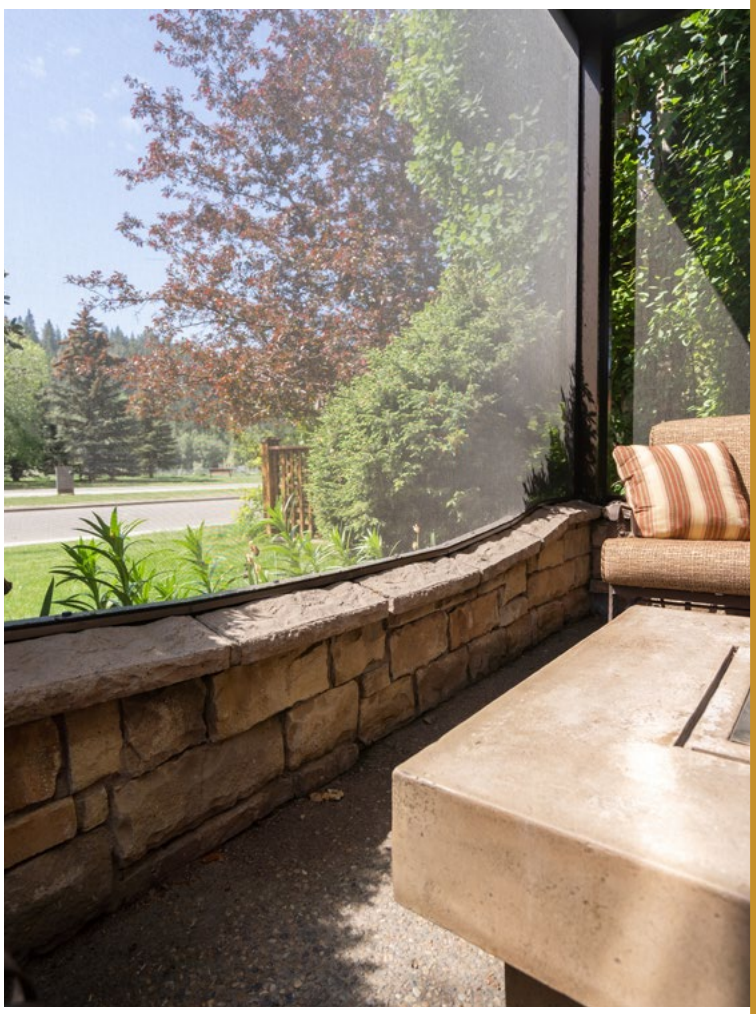

FIXED SCREENS WALLS

| POLYCARBONATE ROOF

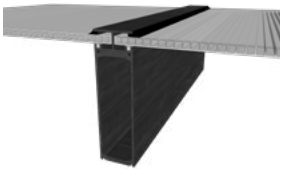

Completely seal and weather proof your patio with a Suncoast Polycarbonate roof. Every roof structure is designed and engineered to withstand local snowloads.

1.

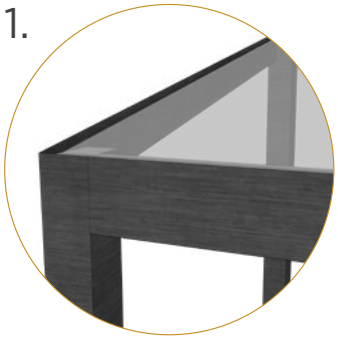

Commercial Framing

- Commercial style framing ready for retractable screen installation and adjoined louver zones.
- Internal or external gutters.

2.

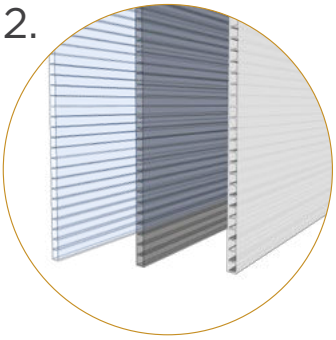

Polycarbonate

- 3 Standard color options: Transparent, Tinted and Opaque.
- 10mm fluted polycarbonate.

3.

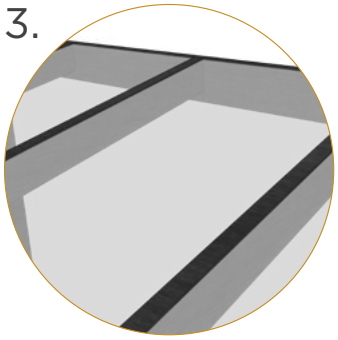

Stronger Than Glass

- Durable 10mm polycarbonate glazing.

Features:

1. Polycarbonate Roofs provide true weather protection while keeping a space light and bright. They are the best option for a sealed enclosure designed for year round use in colder climates. Adding heaters is a great option for applications such as restaurant patios where you hope to maximise the useability of the space all year.
2. A durable 10mm polycarbonate is used which exceeds the impact resistance of glass while being lightweight and easy to maintain. This UV resistant product won't fade or crack in the sun giving you a long lasting and reliable roof. Gutters can be run on the inside or out of the roof frame depending on design and style needs.

POLYCARBONATE ROOF

| ACCESSORIES

Complete your build with some of our integrated accessories

Google Assistant · amazon alexa · Control4 CERTIFIED · CRESTRON · LUTRON

Heaters

With a variety of options from quality manufactures such as Infratech and Bromic you are able to choose the correct heater to suit your style and needs. Choose from power outputs ranging 1400-6000W.

Heaters are available in 120V and 240v options. Additional products are available from Infratech and Bromic.

Lighting

Suncoast louvers are designed with a light track integrated into the gutter system for LED rope lights to create an ambient feel.

Pot lights, pendants, mounted fixtures or other third-party lights can also be added.

Sensors

Rain and wind sensors can be built into the control system of the louvered roofs and retractables. Open and close functions are automated to perform even when you are not around to close everything up in high winds or rain.

Rain and wind sensors can be built in to automate your louver and retractables system. Close the blades and lower the screens as soon as the first few drops land.

Fans

Not every installation location needs a heater. In many locations, fans are added to keep things cool!

For warmer climates, our framing and accessory beams are designed to handle fan mounting.

Architectural Ends

Add architectural ends in either a classic or modern style.

Cornice Add-on

Cornices add an extra element of architectural intricacy for a bold look.

Accessory Beam

Accessory beams are installed for locations where add-ons are desired but a mounting location is needed. Wiring for accessories can be run inside the beam.

Smart Home Automation

Suncoast products are designed to be compatible with smart home and automation systems. Use the app to control you screens and louvers from anywhere or take advantage of voice activation through Google or Alexa.

RollApp Hub

This hub gives you the ability to download the Rollapp and control your louvered roof or retractable screens from your phone.

LinkIT

This hub is used to integrate your louvered roof or screens to an existing home automation system.

Dry Contact

This hub is also used to integrate your louvered roof or screens to an existing home automation system.

Manufacturing

Every single Suncoast retractable is fully custom built to the dimensions of your opening. Careful on-site measurements are taken to the manufacturing facility to build the exact width and drop that will be needed. We will even account for the slope of the floor surface so that the bottom bar contacts across the entire width. Our state of the art CNC machinery and RF welding equipment allow for the industries most precise and high quality manufacturing.

In House Powder Coating Process

Suncoast now ensures the quality and color availability of our coatings by controlling this process in house with a state of the art powder coating line. Using premier powder coating materials and a highly regulated application procedure, we provide our customers with the best finish available in terms of consistency, durability, and resistance to the elements. Our powder coating standards exceed most area requirements and meet even the most demanding ones with a AAMA 2604 rating.

| THE TEAM

The people who make everything happen.

Our manufacturing team is the best in the industry because of their commitment to quality, efficiency, and customer satisfaction. With years of experience and a passion for innovation, they consistently produce products that meet the highest standards of excellence. Their advanced technology and attention to detail ensure that every product is manufactured to exact specifications and delivered on time. Furthermore, they maintain a strong culture of continuous improvement, regularly evaluating and updating their processes to stay ahead of the competition. With our manufacturing team at the forefront of the industry, we are able to provide our customers with exceptional products and service.

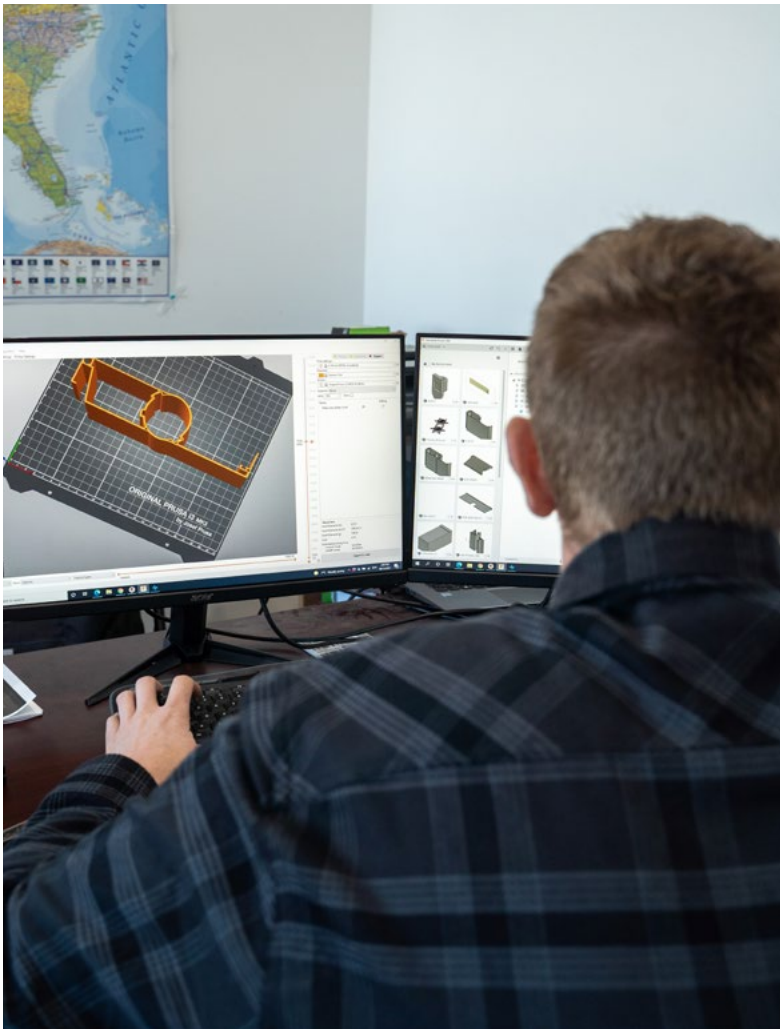

SUNCOAST

+1 877 449 5106 | suncoastenclosures.com